GESSI

01391

GPF0139100000G000

ACCESSORI TECNICI

validity date
≥ 05/2015



Basin waste always open, without overflow

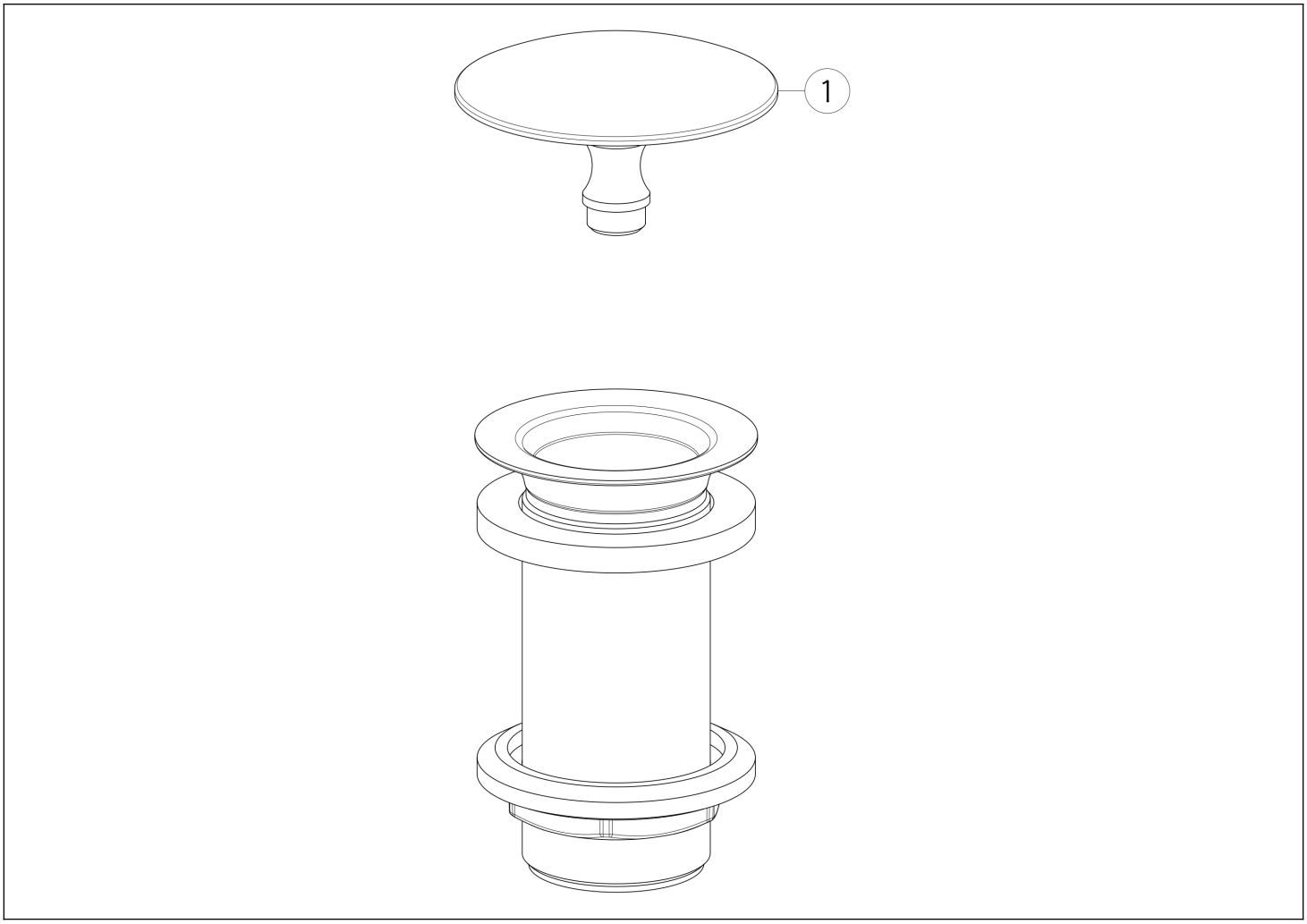

N°	Code	Description
1	SP03692	PLUG

Gessi S.p.A. Parco Gessi, 13037 Serravalle Sesia (Vercelli) Italy Tel. +39 0163 454111 Fax. +39 0163 453150 - www.gessi.com - gessi@gessi.it This drawing, as required by law, may not be made public or reproduced without the written authorization of GESSI S.p.A. Copyright GESSI S.p.A.