GESSI

01423

GPF0142300000G000

ACCESSORI TECNICI

validity date
≥ 04/2015



Basin waste “Stop&Go”, without overflow. Plug in finish. Under-ceramic part in finish 031, on request avaiable in finish.

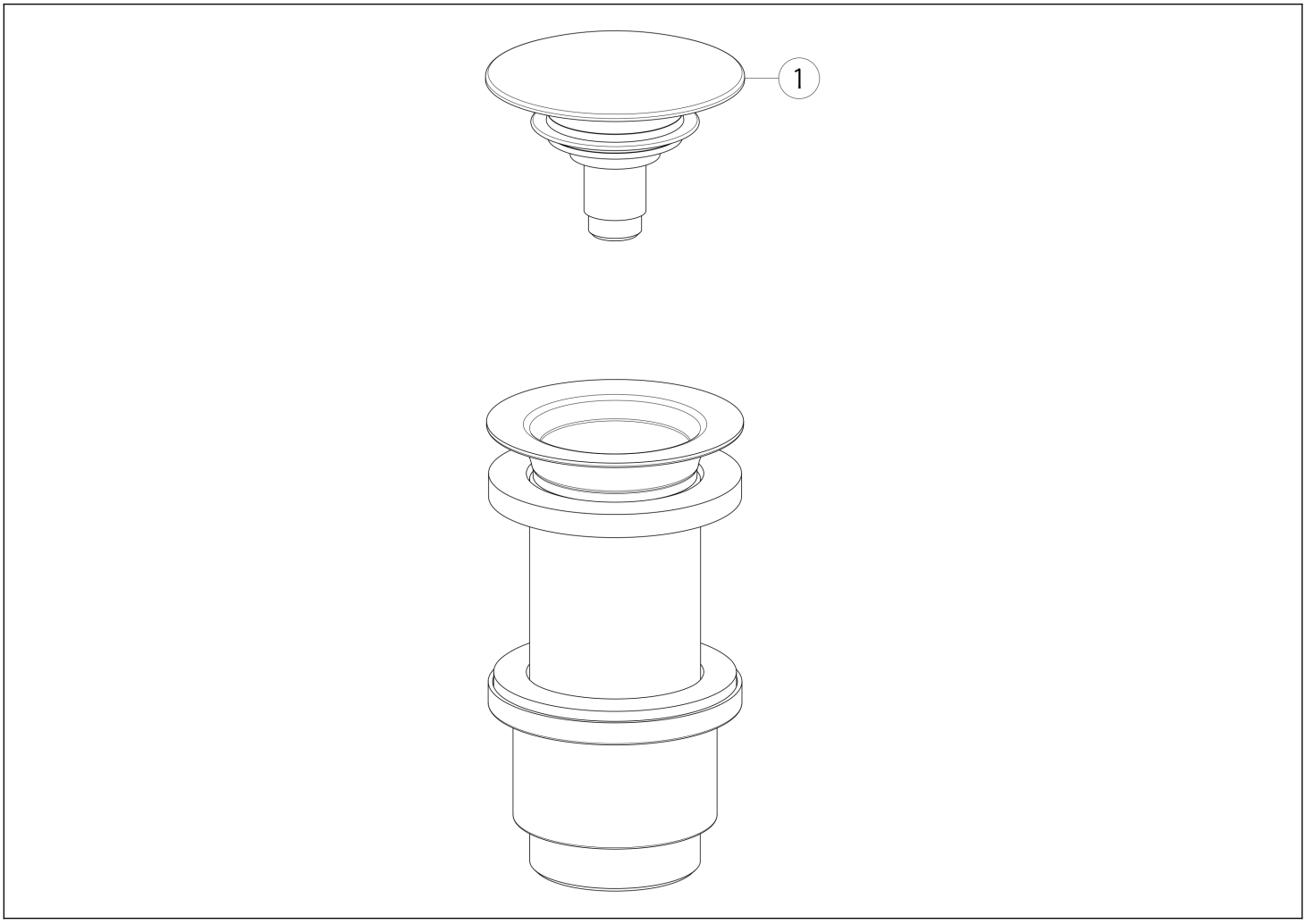

N°	Code	Description
1	SP03641	WASTE COVER CAP

Gessi S.p.A. Parco Gessi, 13037 Serravalle Sesia (Vercelli) Italy Tel. +39 0163 454111 Fax. +39 0163 453150 - www.gessi.com - gessi@gessi.it This drawing, as required by law, may not be made public or reproduced without the written authorization of GESSI S.p.A. Copyright GESSI S.p.A.