GESSI

11924

validity date
≥ 12/2018



GPF11924100000G000

RETTANGOLO

High basin mixer, flexible connections, without waste

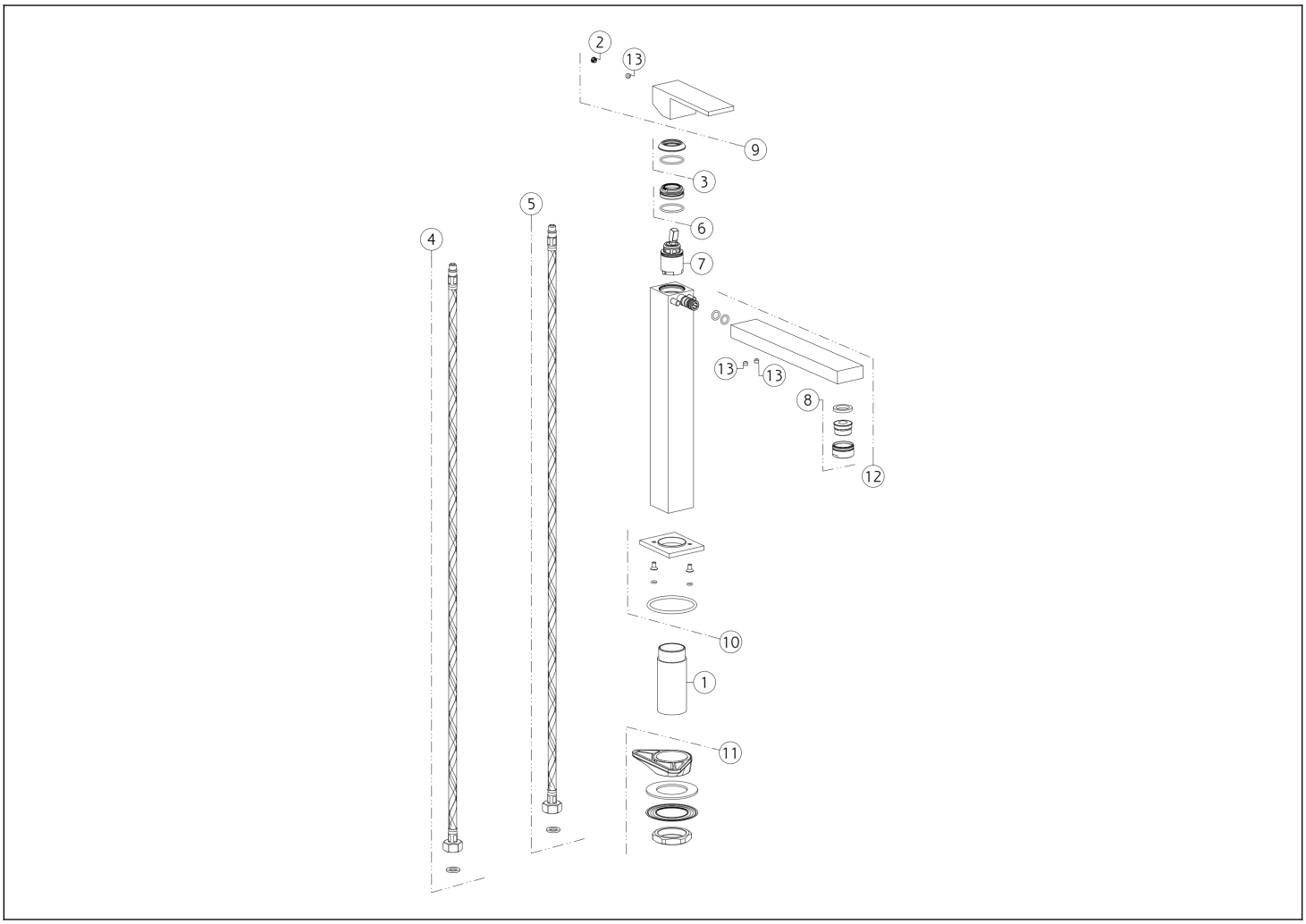

N°	Code	Description
1	SP03587	SHANK
2	SP00002	SCREW COVER
3	SP00484	FINISHING RING NUT
4	SP01287	RED SUPPLY HOSE
5	SP01286	BLU SUPPLY HOSE
6	SP01278	FIXING RING NUT
7	SP01442	CARTRIDGE

N°	Code	Description
8	SP01161	COMPLETE AERATOR
9	SP00998	HANDLE
10	SP00995	BASE
11	SP01155	FIXING SET
12	SP01167	COMPLETE SPOUT
13	SP00137	SCREW

Gessi S.p.A. Parco Gessi, 13037 Serravalle Sesia (Vercelli) Italy Tel. +39 0163 454111 Fax. +39 0163 453150 - www.gessi.com - gessi@gessi.it This drawing, as required by law, may not be made public or reproduced without the written authorization of GESSI S.p.A. Copyright GESSI S.p.A.