GESSI

20005

validity date
≥ 10/2009



GPF2000500000G000

RETTANGOLO

Separate control

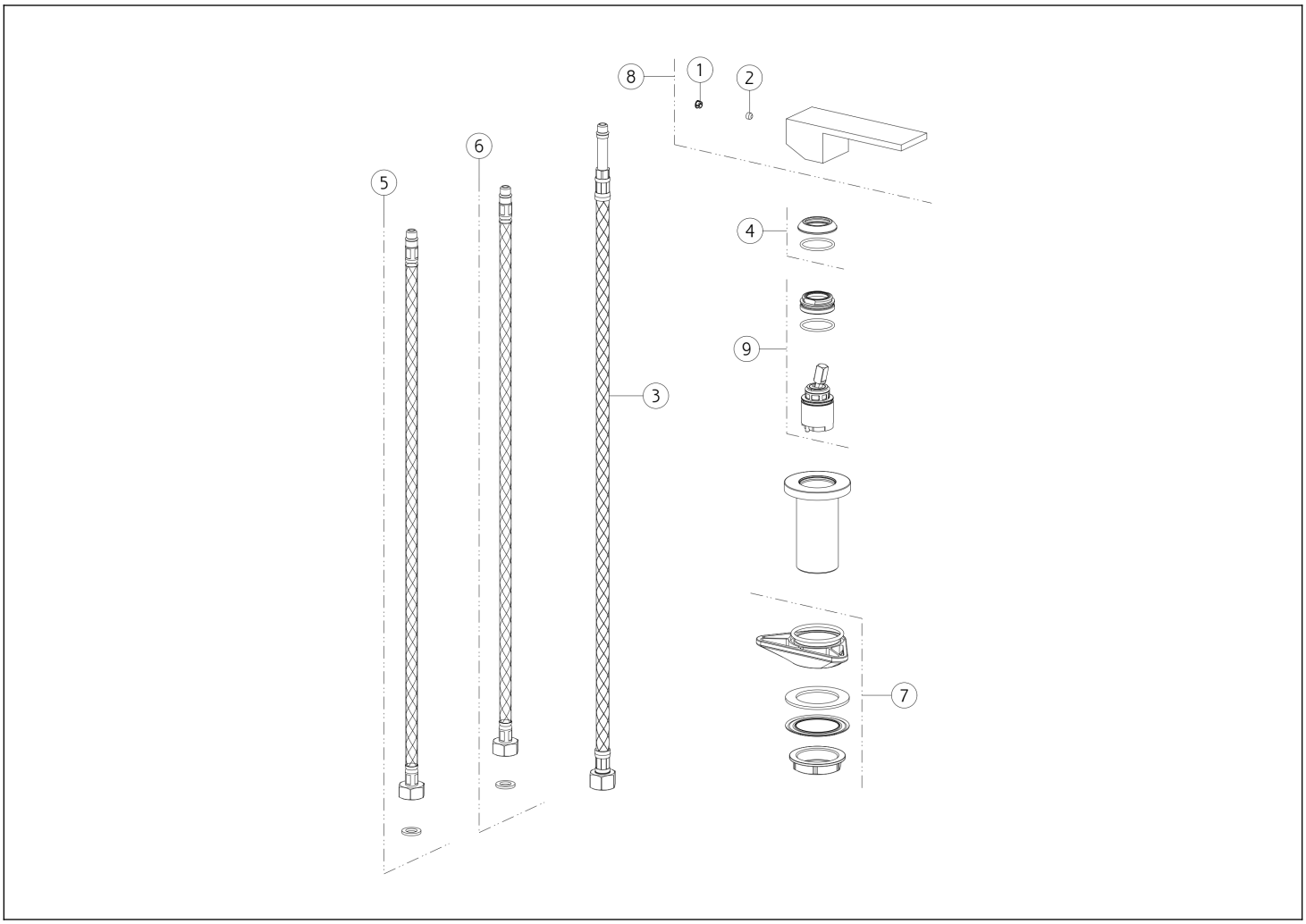

N°	Code	Description
1	SP00002	SCREW COVER
2	SP00137	SCREW
3	SP00987	HOSE
4	SP00484	FINISHING RING NUT
5	SP01284	BLU SUPPLY HOSE

N°	Code	Description
6	SP01285	RED SUPPLY HOSE
7	SP01250	FIXING SET
8	SP00998	HANDLE
9	SP01233	CARTRIDGE

 This drawing, as required by law, may not be made public or reproduced without the written authorization of GESSI S.p.A. Copyright GESSI S.p.A.