GESSI

20021

GPF2002110000G000

RETTANGOLO

validity date
≥ 05/2023



Wall-mounted push-button Shut-Off douchette with 1/2" connection.

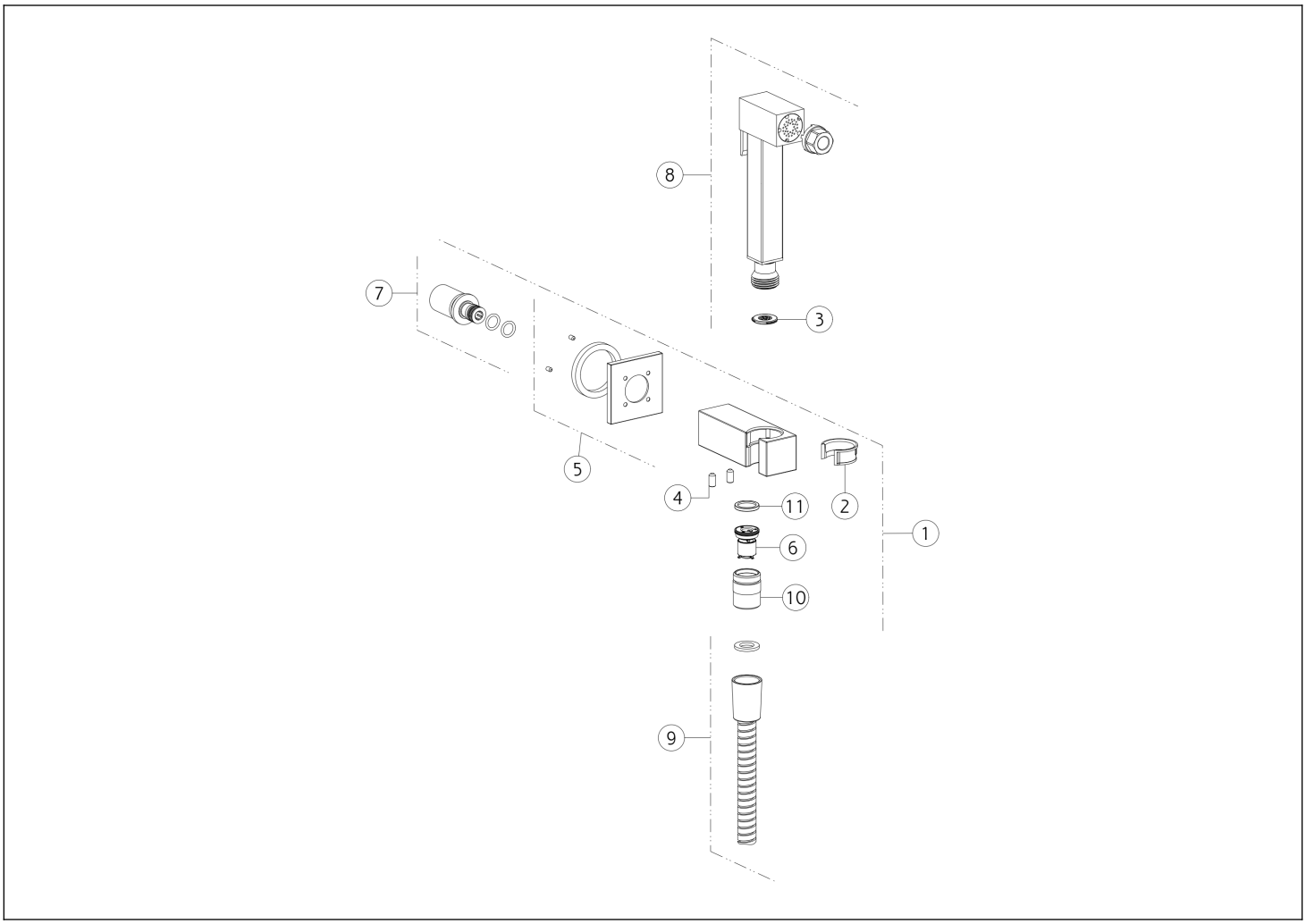

N°	Code	Description
1	SP03662	CONNECTION WATER OUTLET WITH FIXED HOOK
2	SP03654	BUSH
3	SP05404	FLOW REGOLATOR
4	SP01352	SCREW
5	SP04271	COVER
6	SP04270	VALVE

N°	Code	Description
7	SP01816	NIPPLE
8	SP03661	HANDSHOWER
9	SP02636	HOSE
10	SP04276	NIPPLE
11	SP04574	FILTER GASKET

Gessi S.p.A. Parco Gessi, 13037 Serravalle Sesia (Vercelli) Italy Tel. +39 0163 454111 Fax. +39 0163 453150 - www.gessi.com - gessi@gessi.it This drawing, as required by law, may not be made public or reproduced without the written authorization of GESSI S.p.A. Copyright GESSI S.p.A.