GESSI

20023

GPF2002310000G000

RETTANGOLO

validity date
≥ 05/2023



Wall-mounted push-button Shut-Off douchette with 1/2" connection.

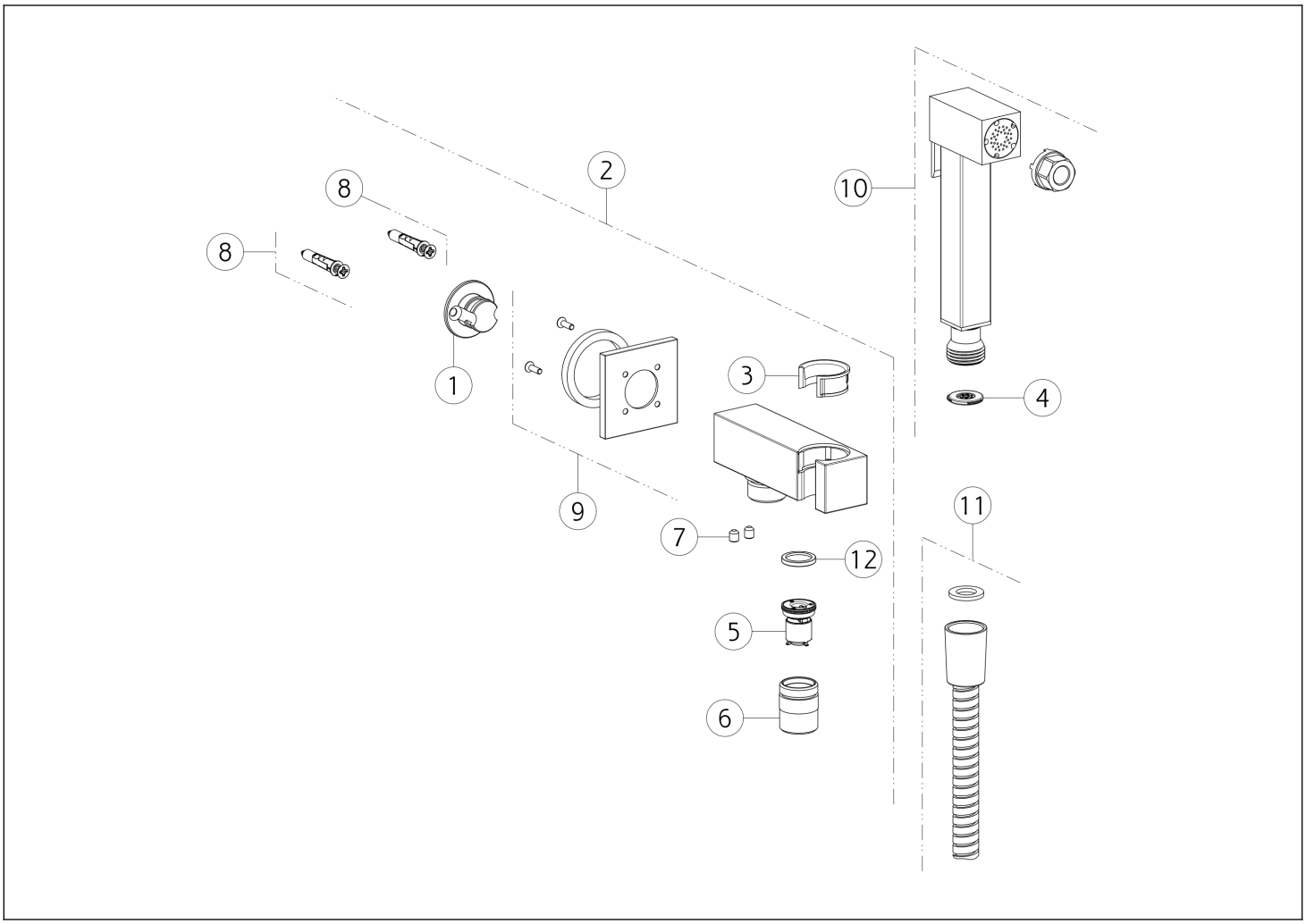

N°	Code	Description
1	SP04277	WALL SUPPORT
2	SP04025	CONNECTION WATER OUTLET WITH FIXED HOOK
3	SP03654	BUSH
4	SP05404	FLOW REGOLATOR
5	SP04270	VALVE
6	SP04276	NIPPLE

N°	Code	Description
7	SP00284	SCREW
8	SP01775	FIXING SET
9	SP04271	COVER
10	SP03661	HANDSHOWER
11	SP02636	HOSE
12	SP04574	FILTER GASKET

Gessi S.p.A. Parco Gessi, 13037 Serravalle Sesia (Vercelli) Italy Tel. +39 0163 454111 Fax. +39 0163 453150 - www.gessi.com - gessi@gessi.it This drawing, as required by law, may not be made public or reproduced without the written authorization of GESSI S.p.A. Copyright GESSI S.p.A.