GESSI

20111

GPF2011120000G000

RETTANGOLO

validity date
≥ 05/2017



External bath thermostatic mixer with automatic bath/shower diverter

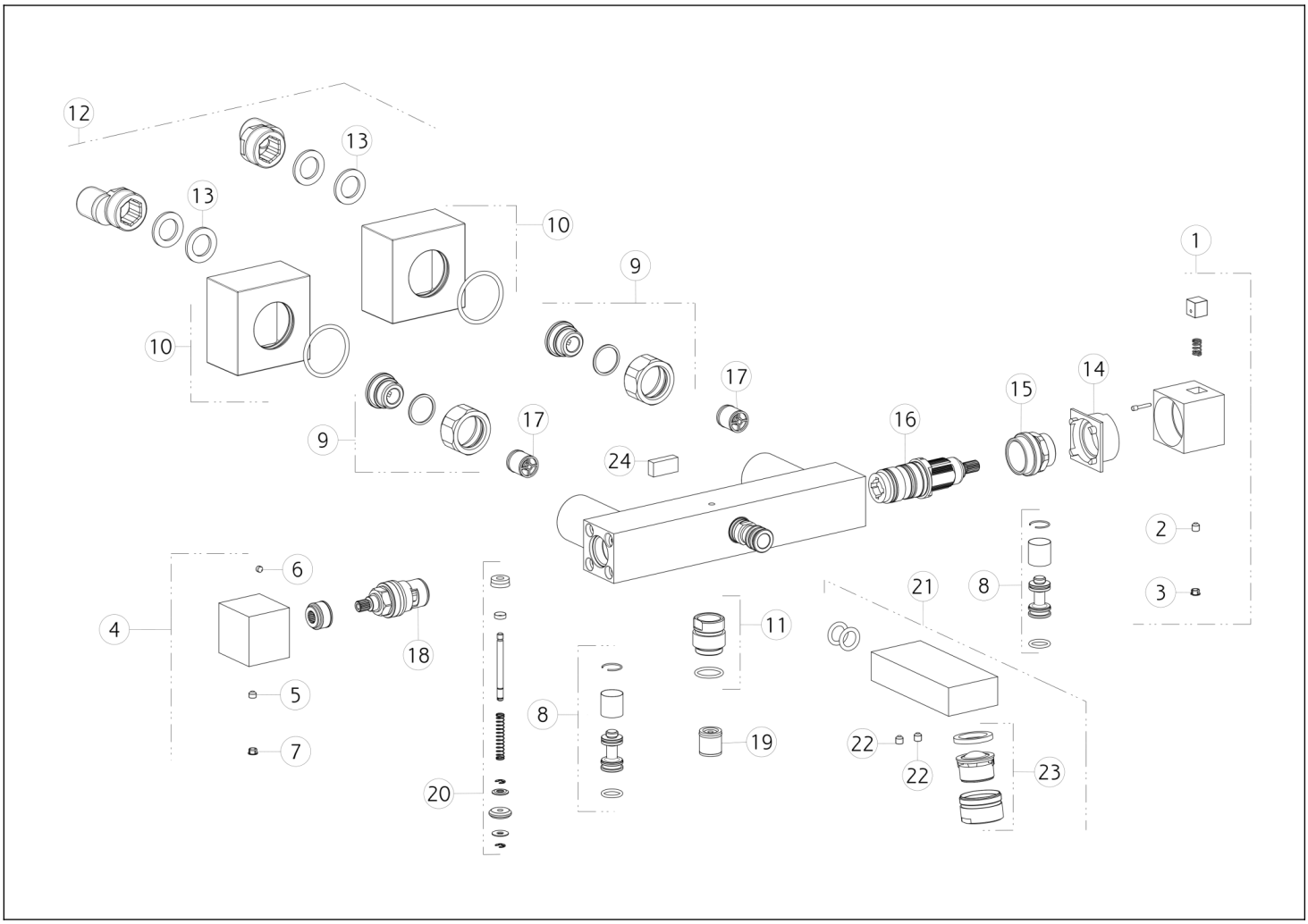

N°	Code	Description
1	SP01189	HANDLE
2	SP00610	SCREW
3	SP00002	SCREW COVER
4	SP01187	HANDLE
5	SP00137	SCREW
6	SP01188	SCREW
7	SP00002	SCREW COVER
8	SP01003	FILTER
9	SP01004	FIXING SET
10	SP01122	COVER
11	SP01008	NIPPLE
12	SP00017	ECCENTRIC JOINT

N°	Code	Description
13	SP00154	GASKET
14	SP01927	INDICATOR RING
15	SP01185	FIXING RING NUT
16	SP01184	THERMOSTATIC CARTRIDGE
17	SP01183	NON RETURN VALVE
18	SP00129	HEADVALVE
19	SP00014	NON RETURN VALVE
20	SP01006	DIVERTER
21	SP01005	COMPLETE SPOUT
22	SP00610	SCREW
23	SP00853	COMPLETE AERATOR
24	SP01002	KNOB

Gessi S.p.A. Parco Gessi, 13037 Serravalle Sesia (Vercelli) Italy Tel. +39 0163 454111 Fax. +39 0163 453150 - www.gessi.com - gessi@gessi.it This drawing, as required by law, may not be made public or reproduced without the written authorization of GESSI S.p.A. Copyright GESSI S.p.A.