GESSI

20114

validity date
≥ 03/2015

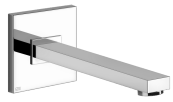

GPF2011400000G000

RETTANGOLO

Wall-mounted spout to be completed with separate control

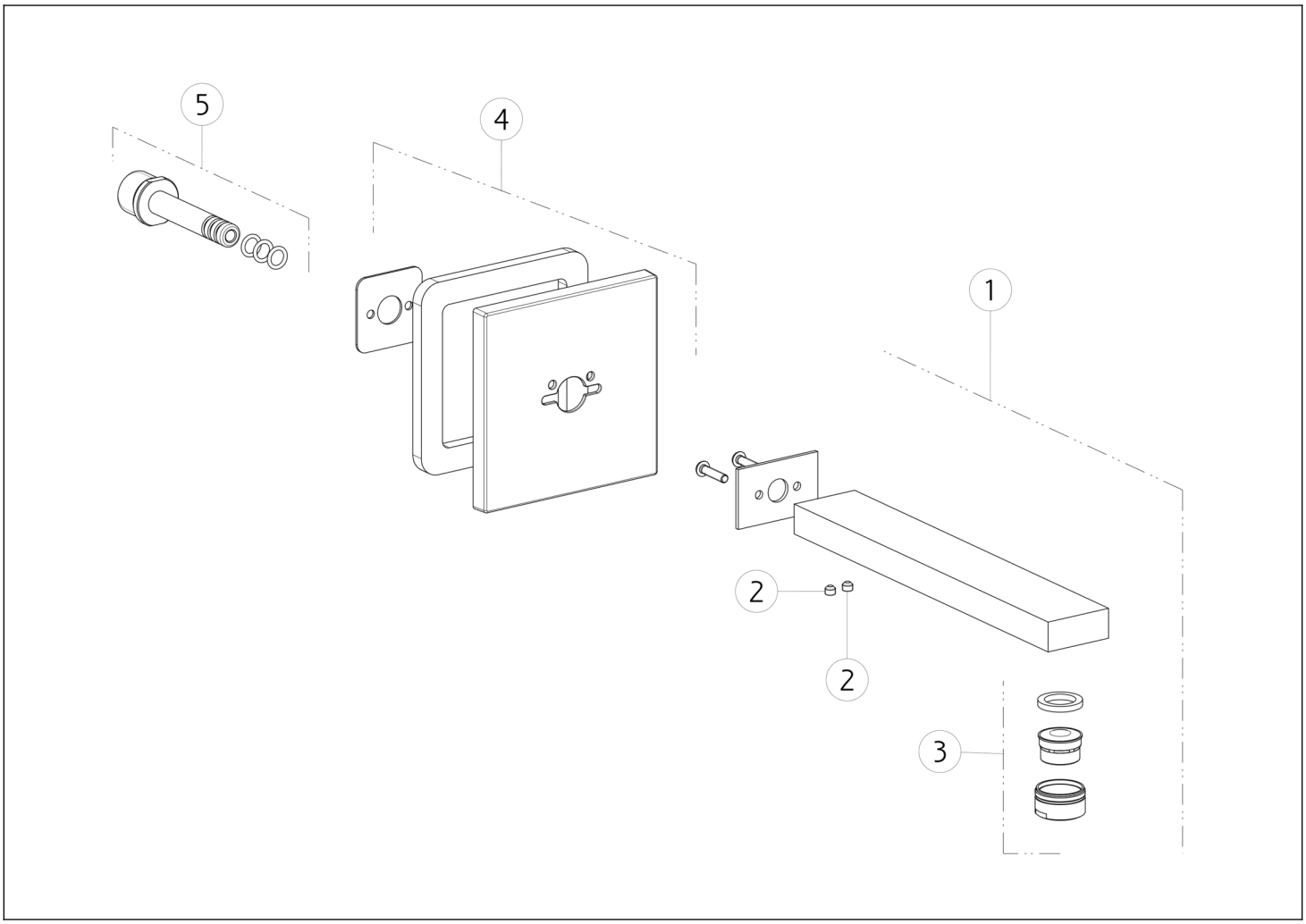

N°	Code	Description
1	SP01168	SPOUT
2	SP00137	GRUB SCREW
3	SP01161	COMPLETE AERATOR

N°	Code	Description
4	SP01169	FINISHING PLATE
5	SP00142	JOINT

Gessi S.p.A. Parco Gessi, 13037 Serravalle Sesia (Vercelli) Italy Tel. +39 0163 454111 Fax. +39 0163 453150 - www.gessi.com - gessi@gessi.it This drawing, as required by law, may not be made public or reproduced without the written authorization of GESSI S.p.A. Copyright GESSI S.p.A.