GESSI

20120

validity date
≥ 02/2015

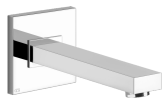

GPF2012000000G000

RETTANGOLO

Bath spout to be completed with separate control (not included)

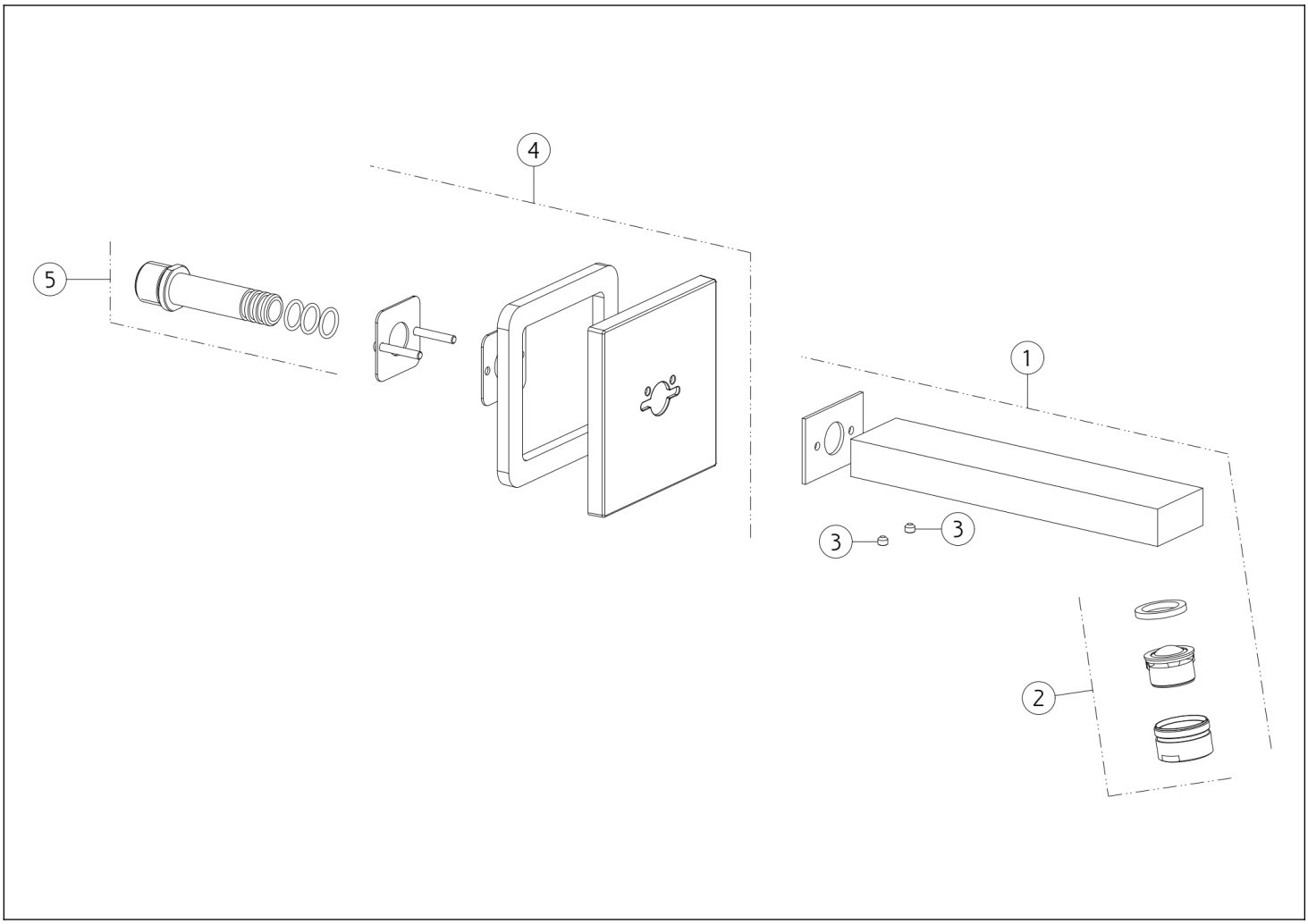

N°	Code	Description
1	SP01981	SPOUT
2	SP00853	COMPLETE AERATOR
3	SP00137	SCREW

N°	Code	Description
4	SP01982	FINISHING PLATE
5	SP00146	JOINT

Gessi S.p.A. Parco Gessi, 13037 Serravalle Sesia (Vercelli) Italy Tel. +39 0163 454111 Fax. +39 0163 453150 - www.gessi.com - gessi@gessi.it This drawing, as required by law, may not be made public or reproduced without the written authorization of GESSI S.p.A. Copyright GESSI S.p.A.