GESSI

20121

validity date
≥ 05/2015

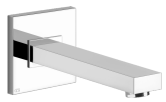

GPF2012100000G000

RETTANGOLO

Bath spout with length on request with separate control (not included)

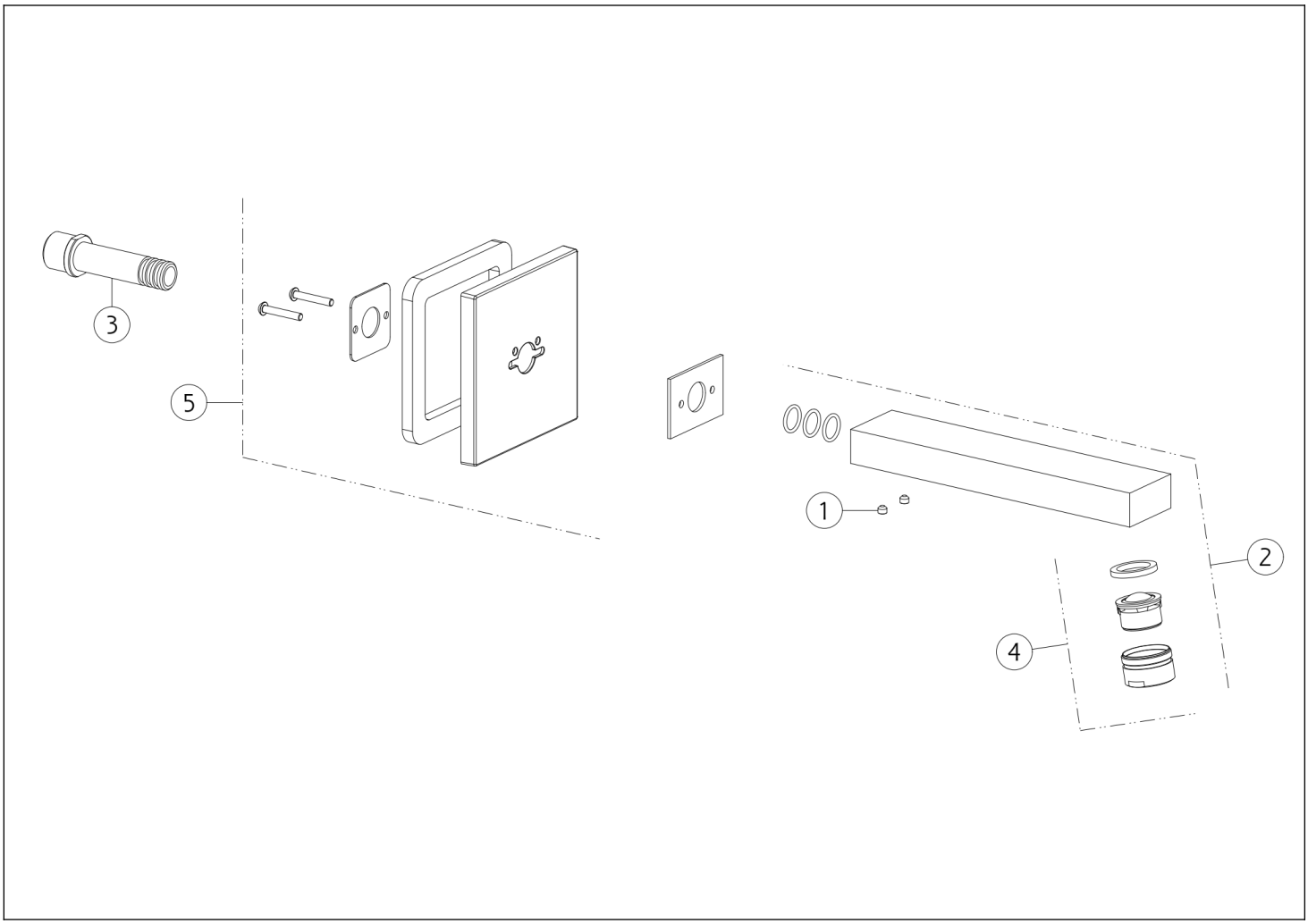

N°	Code	Description
1	SP00137	SCREW
2	SP04056	COMPLETE SPOUT
3	SP00146	JOINT

N°	Code	Description
4	SP00853	COMPLETE AERATOR
5	SP01982	FINISHING PLATE

Gessi S.p.A. Parco Gessi, 13037 Serravalle Sesia (Vercelli) Italy Tel. +39 0163 454111 Fax. +39 0163 453150 - www.gessi.com - gessi@gessi.it This drawing, as required by law, may not be made public or reproduced without the written authorization of GESSI S.p.A. Copyright GESSI S.p.A.