GESSI

20142

GPF20142100000G000

RETTANGOLO

validity date
≥ 10/2013



Sliding rail with antilimestone handshower, 1,50 m flexible hose and water outlet

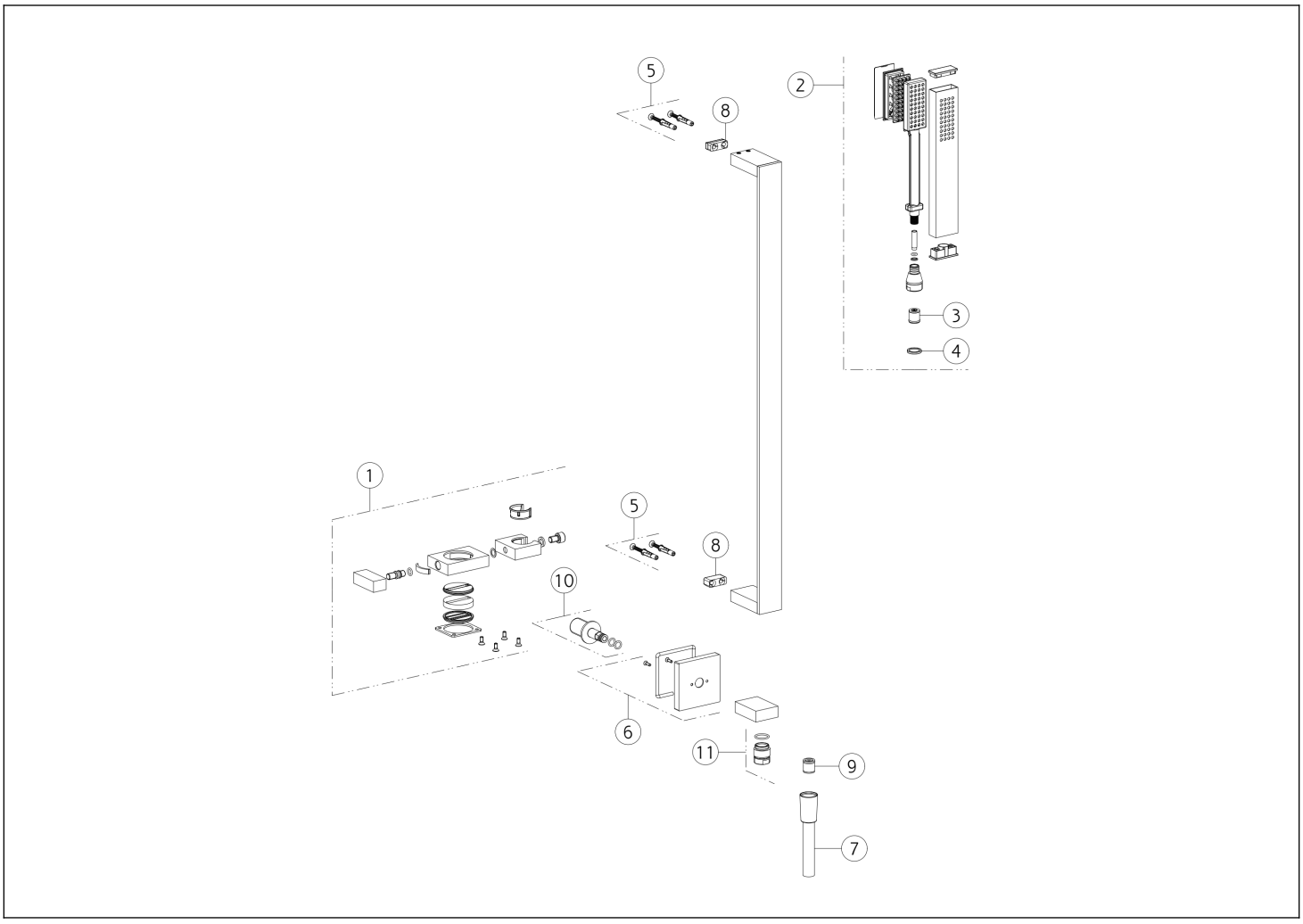

N°	Code	Description
1	SP01944	SLIDING SUPPORT
2	PF20154	HANDSHOWER
3	SP00900	FLOW REGOLATOR
4	SP00243	GASKET
5	SP00167	FIXING SET
6	SP01200	COVER

N°	Code	Description
7	PF01637	HOSE
8	SP00822	WALL SUPPORT
9	SP00014	NON RETURN VALVE
10	SP01254	NIPPLE
11	SP01008	NIPPLE

Gessi S.p.A. Parco Gessi, 13037 Serravalle Sesia (Vercelli) Italy Tel. +39 0163 454111 Fax. +39 0163 453150 - www.gessi.com - gessi@gessi.it This drawing, as required by law, may not be made public or reproduced without the written authorization of GESSI S.p.A. Copyright GESSI S.p.A.