GESSI

20148

validity date
≥ 07/2009



GPF2014800000G000

RETTANGOLO

Wall-fixing antilimestone and adjustable headshower

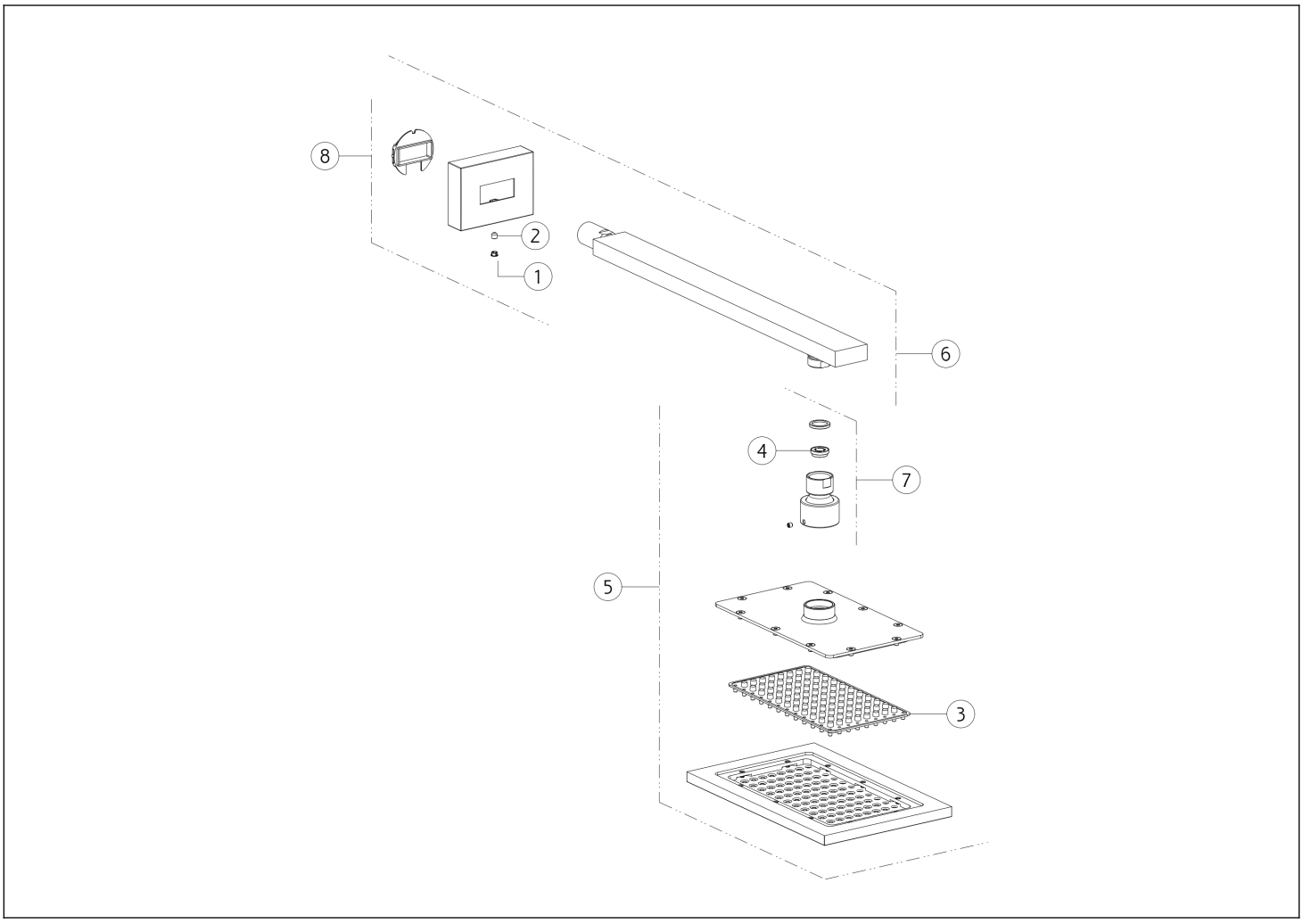

N°	Code	Description
1	SP00002	SCREW COVER
2	SP00610	GRUB SCREW
3	SP03858	ANTI-LIMESCALE
4	SP02191	FLOW LIMITING VALVE

N°	Code	Description
5	SP03839	SHOWERHEAD
6	SP03582	SHOWER ARM
7	SP00244	JOINT
8	SP01205	ROSETTE

Gessi S.p.A. Parco Gessi, 13037 Serravalle Sesia (Vercelli) Italy Tel. +39 0163 454111 Fax. +39 0163 453150 - www.gessi.com - gessi@gessi.it This drawing, as required by law, may not be made public or reproduced without the written authorization of GESSI S.p.A. Copyright GESSI S.p.A.