GESSI

20151

GPF2015100000G000

RETTANGOLO

validity date
≥ 11/2009



Ceiling-mounted adjustable and antilimestone showerhead

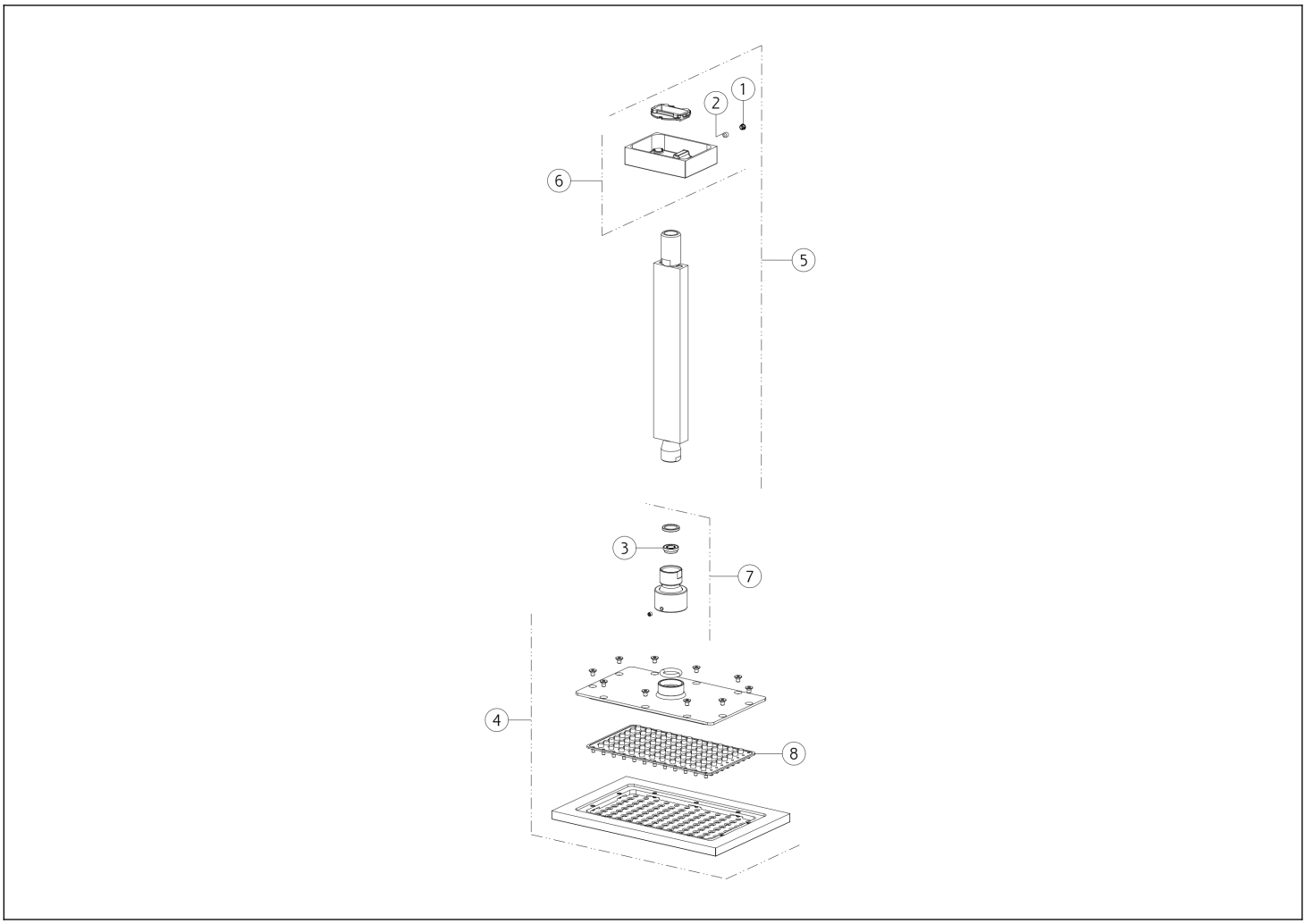

N°	Code	Description
1	SP00002	SCREW COVER
2	SP00610	SCREW
3	SP02191	FLOW REGOLATOR
4	SP03839	SHOWERHEAD

N°	Code	Description
5	SP03606	SHOWER ARM
6	SP01205	COVER
7	SP00244	JOINT
8	SP03858	ANTILIMESTONE

Gessi S.p.A. Parco Gessi, 13037 Serravalle Sesia (Vercelli) Italy Tel. +39 0163 454111 Fax. +39 0163 453150 - www.gessi.com - gessi@gessi.it This drawing, as required by law, may not be made public or reproduced without the written authorization of GESSI S.p.A. Copyright GESSI S.p.A.