GESSI

20157

validity date
≥ 07/2009



GPF2015700000G000

RETTANGOLO

Fixed handshower hook

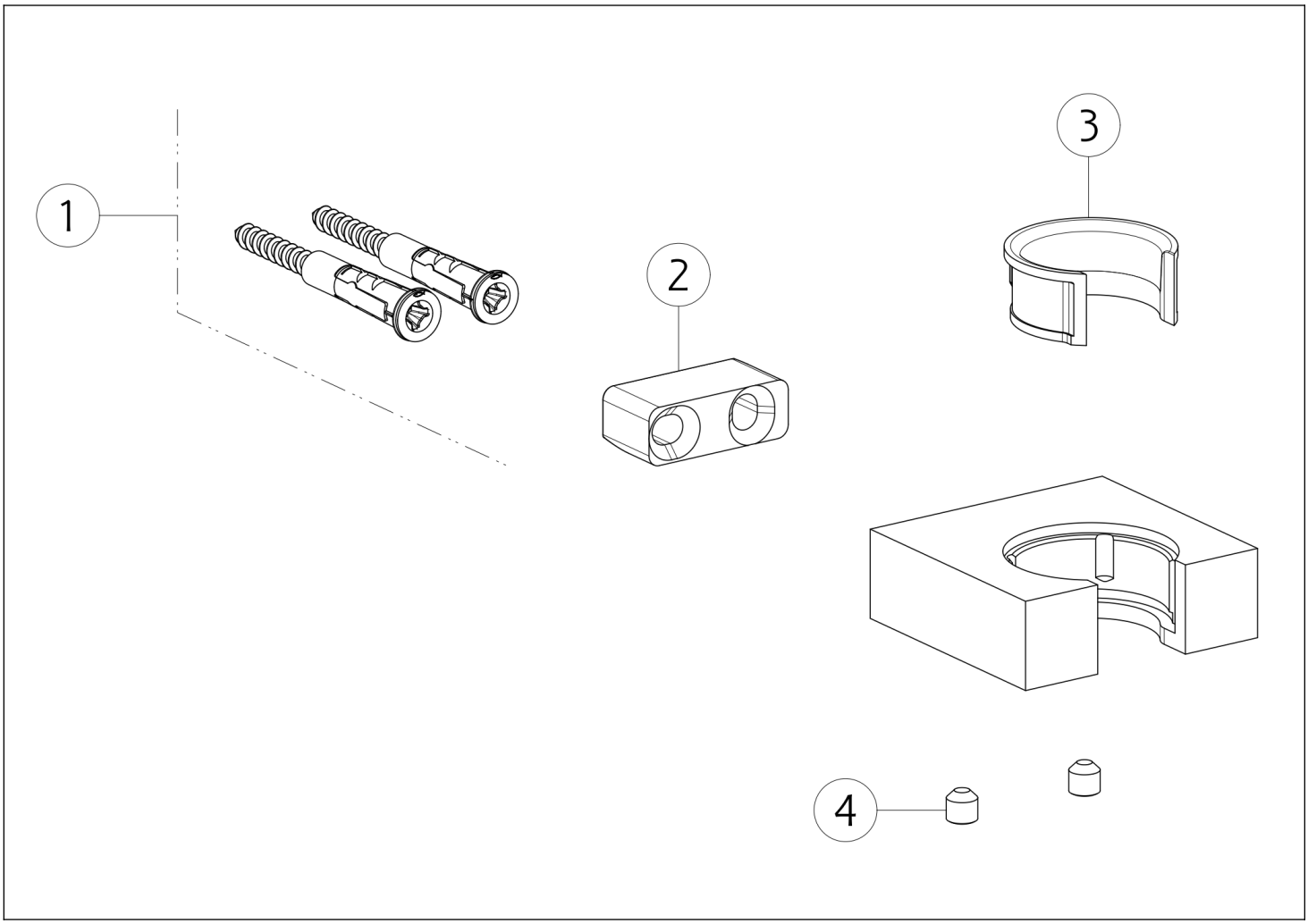

N°	Code	Description
1	SP00031	FIXING KIT
2	SP04052	WALL-MOUNTED HOLDER

N°	Code	Description
3	SP03654	BUSH
4	SP00137	GRUB SCREW

Gessi S.p.A. Parco Gessi, 13037 Serravalle Sesia (Vercelli) Italy Tel. +39 0163 454111 Fax. +39 0163 453150 - www.gessi.com - gessi@gessi.it This drawing, as required by law, may not be made public or reproduced without the written authorization of GESSI S.p.A. Copyright GESSI S.p.A.