GESSI

20169

validity date
≥ 06/2017



GPF2016910000G000

RETTANGOLO

water outlet

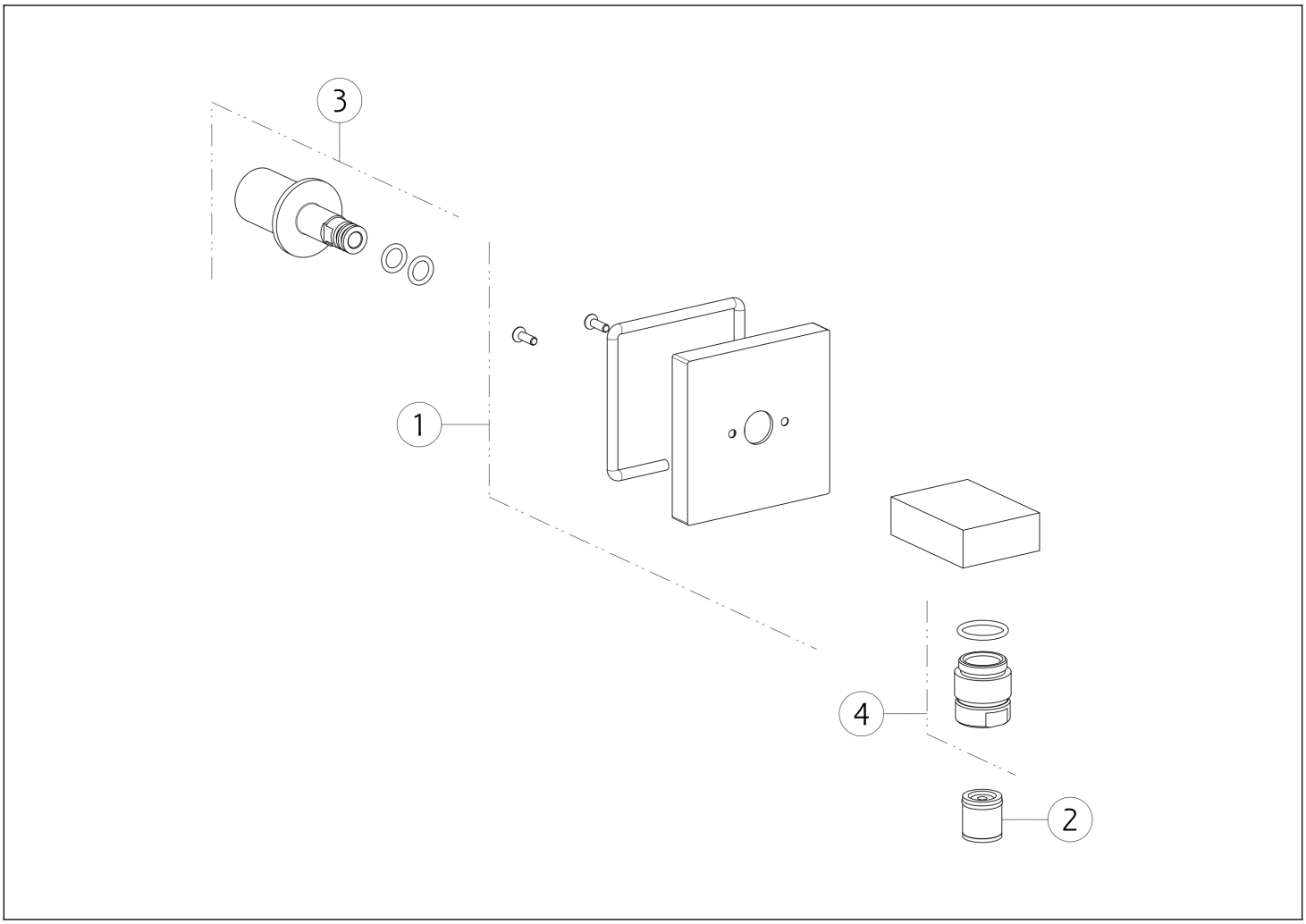

N°	Code	Description
1	SP01200	COVER
2	SP00014	NON RETURN VALVE

N°	Code	Description
3	SP01254	NIPPLE
4	SP01008	NIPPLE

Gessi S.p.A. Parco Gessi, 13037 Serravalle Sesia (Vercelli) Italy Tel. +39 0163 454111 Fax. +39 0163 453150 - www.gessi.com - gessi@gessi.it This drawing, as required by law, may not be made public or reproduced without the written authorization of GESSI S.p.A. Copyright GESSI S.p.A.