GESSI

20191

GPF2019100000G000

CASCATA

validity date
≥ 09/2008



Bath group waterfall spout to be completed with separate control

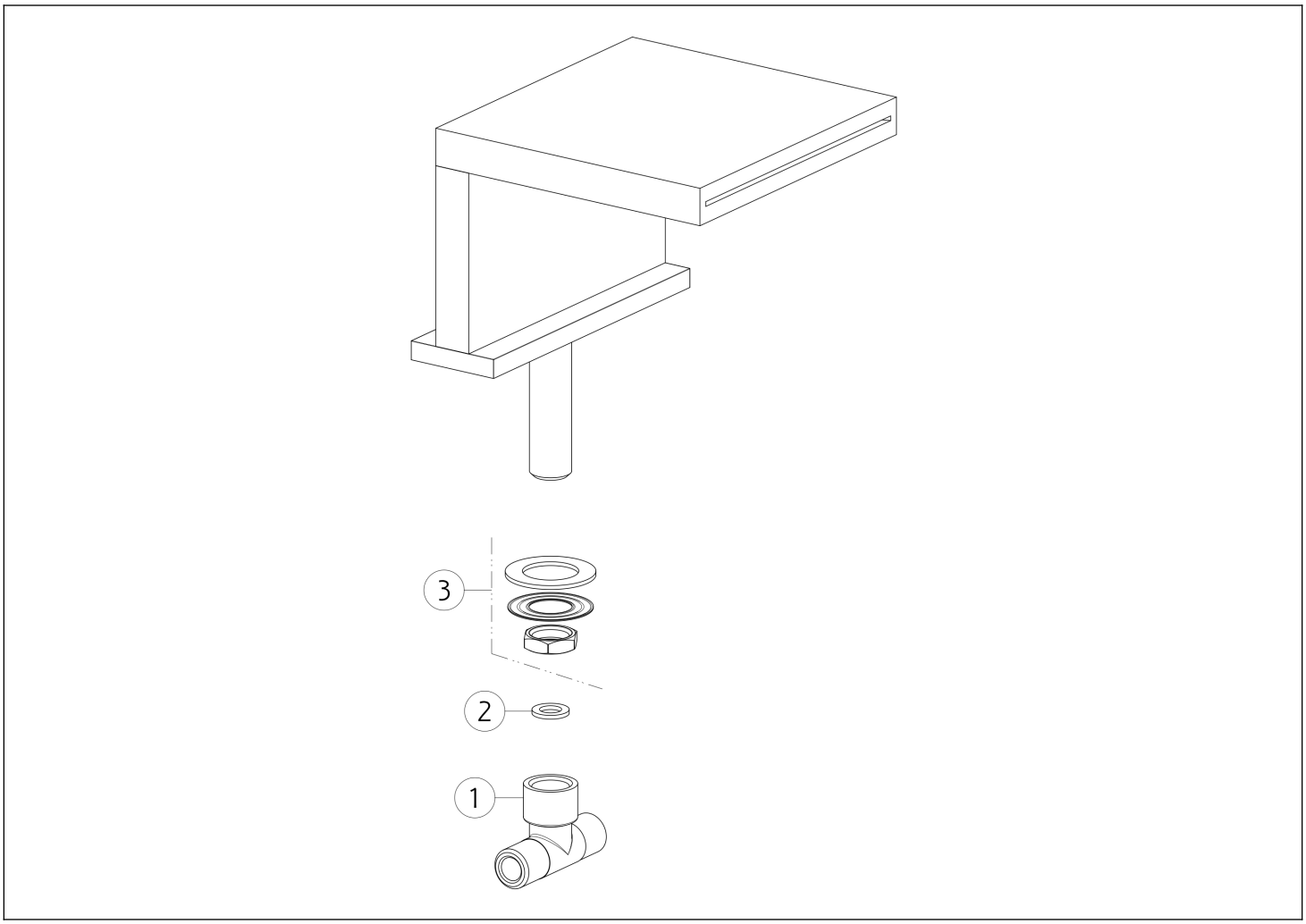

N°	Code	Description
1	SP03907	NIPPLE
2	SP00210	GASKET

N°	Code	Description
3	SP01720	FIXING SET

Gessi S.p.A. Parco Gessi, 13037 Serravalle Sesia (Vercelli) Italy Tel. +39 0163 454111 Fax. +39 0163 453150 - www.gessi.com - gessi@gessi.it This drawing, as required by law, may not be made public or reproduced without the written authorization of GESSI S.p.A. Copyright GESSI S.p.A.