GESSI

20293

validity date
≥ 10/2015



GPF2029300000G000

CASCATA

Wall-fixing cascade shower spout to be completed with separate control (not included)

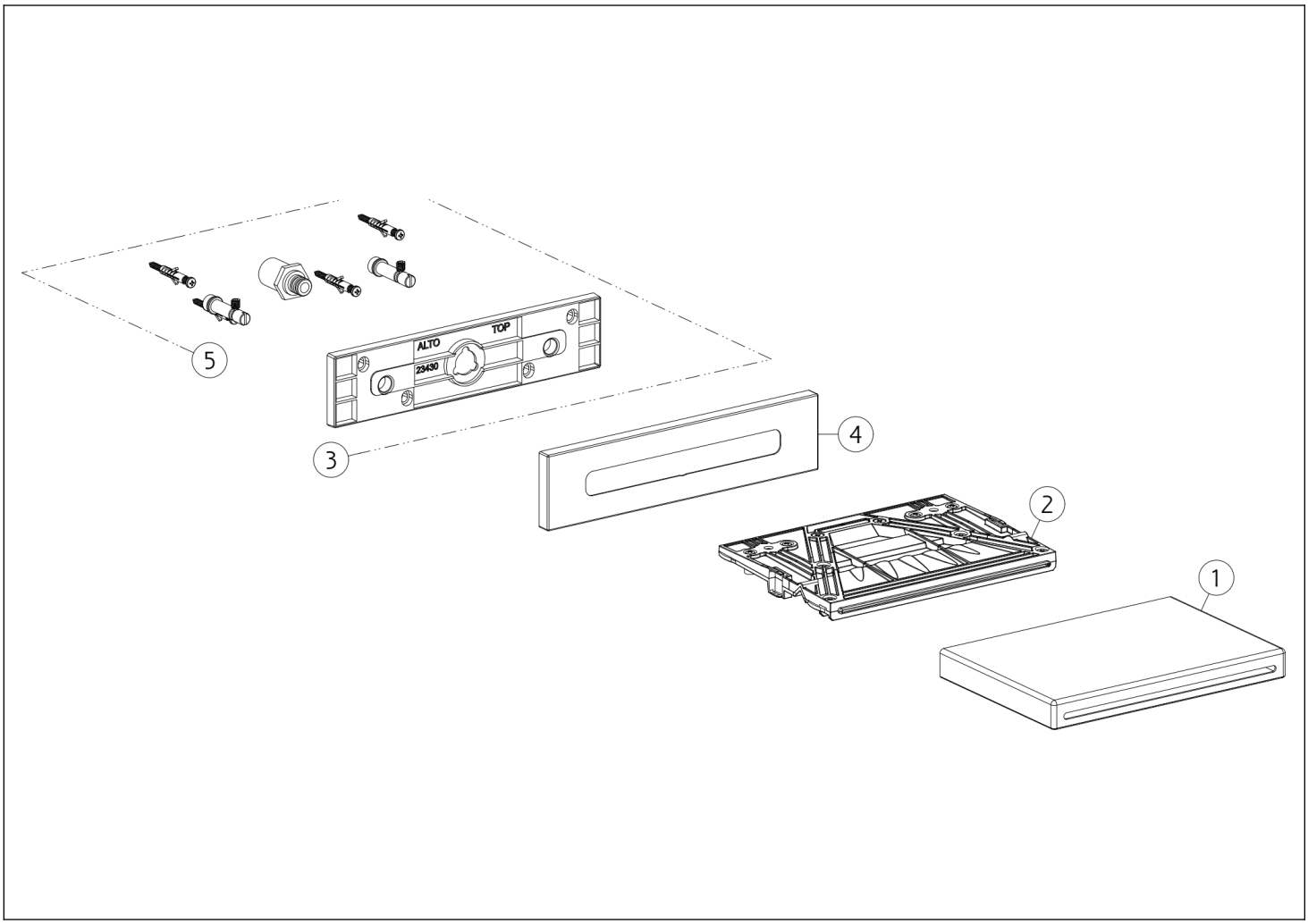

N°	Code	Description
1	SP02947	FINISHING CARTER
2	SP03100	CASCADE
3	SP02953	BACK PLATE

N°	Code	Description
4	SP02710	ROSETTE
5	SP03050	FIXING KIT

Gessi S.p.A. Parco Gessi, 13037 Serravalle Sesia (Vercelli) Italy Tel. +39 0163 454111 Fax. +39 0163 453150 - www.gessi.com - gessi@gessi.it This drawing, as required by law, may not be made public or reproduced without the written authorization of GESSI S.p.A. Copyright GESSI S.p.A.