GESSI

20295

GPF2029500000G000

CASCATA

validity date
≥ 11/2018



Wall-fixing cascade shower spout to be completed with separate control (not included)

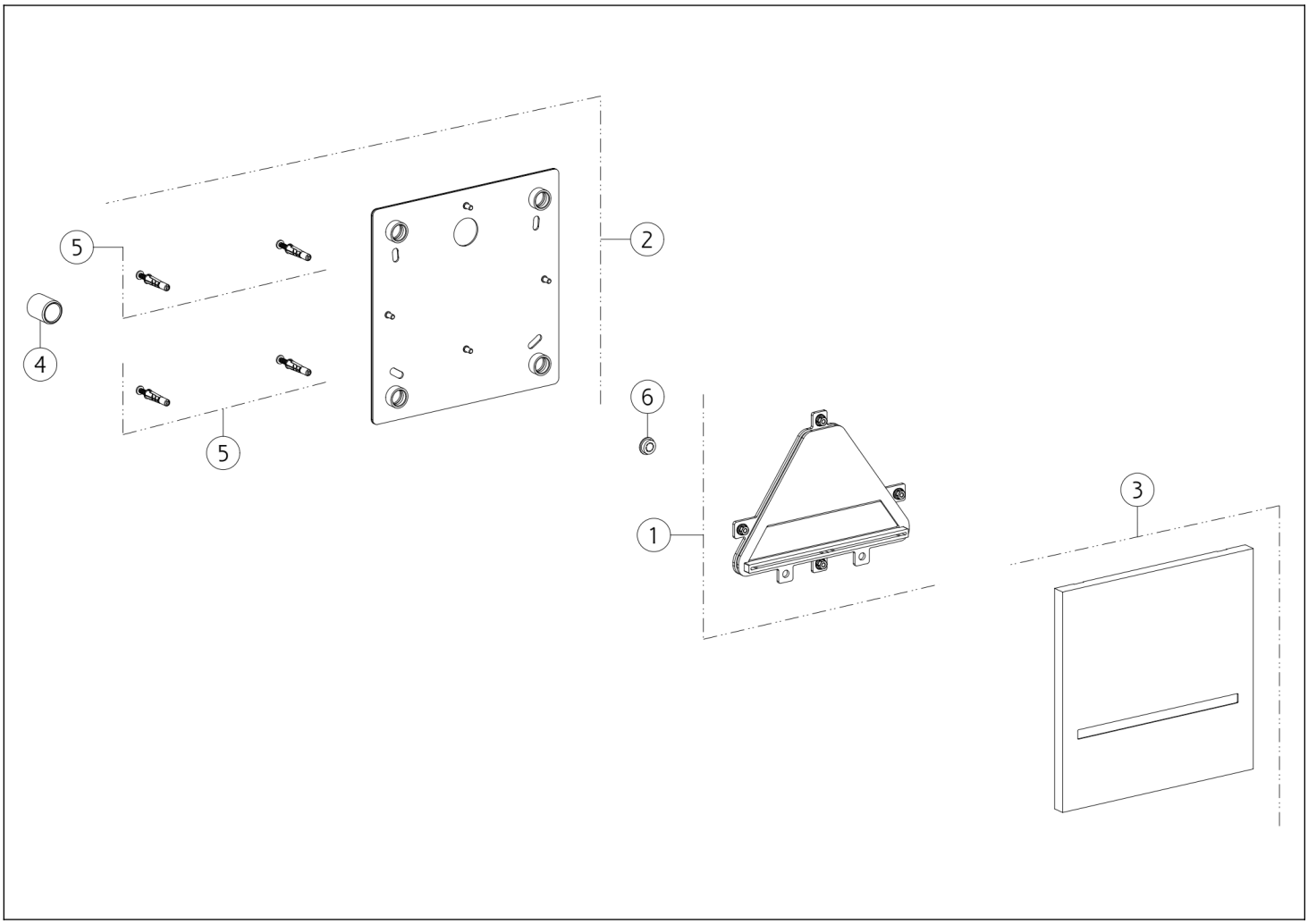

N°	Code	Description
1	SP03056	SPOUT
2	SP03063	BACK PLATE
3	SP03027	FINISHING PLATE

N°	Code	Description
4	SP03500	NIPPLE
5	SP02273	FIXING KIT
6	SP01915	FLOW LIMITING VALVE

Gessi S.p.A. Parco Gessi, 13037 Serravalle Sesia (Vercelli) Italy Tel. +39 0163 454111 Fax. +39 0163 453150 - www.gessi.com - gessi@gessi.it This drawing, as required by law, may not be made public or reproduced without the written authorization of GESSI S.p.A. Copyright GESSI S.p.A.