GESSI

20837

GPF2083720000G000

RETTANGOLO

validity date
≥ 02/2021



Standing Soap dispenser white

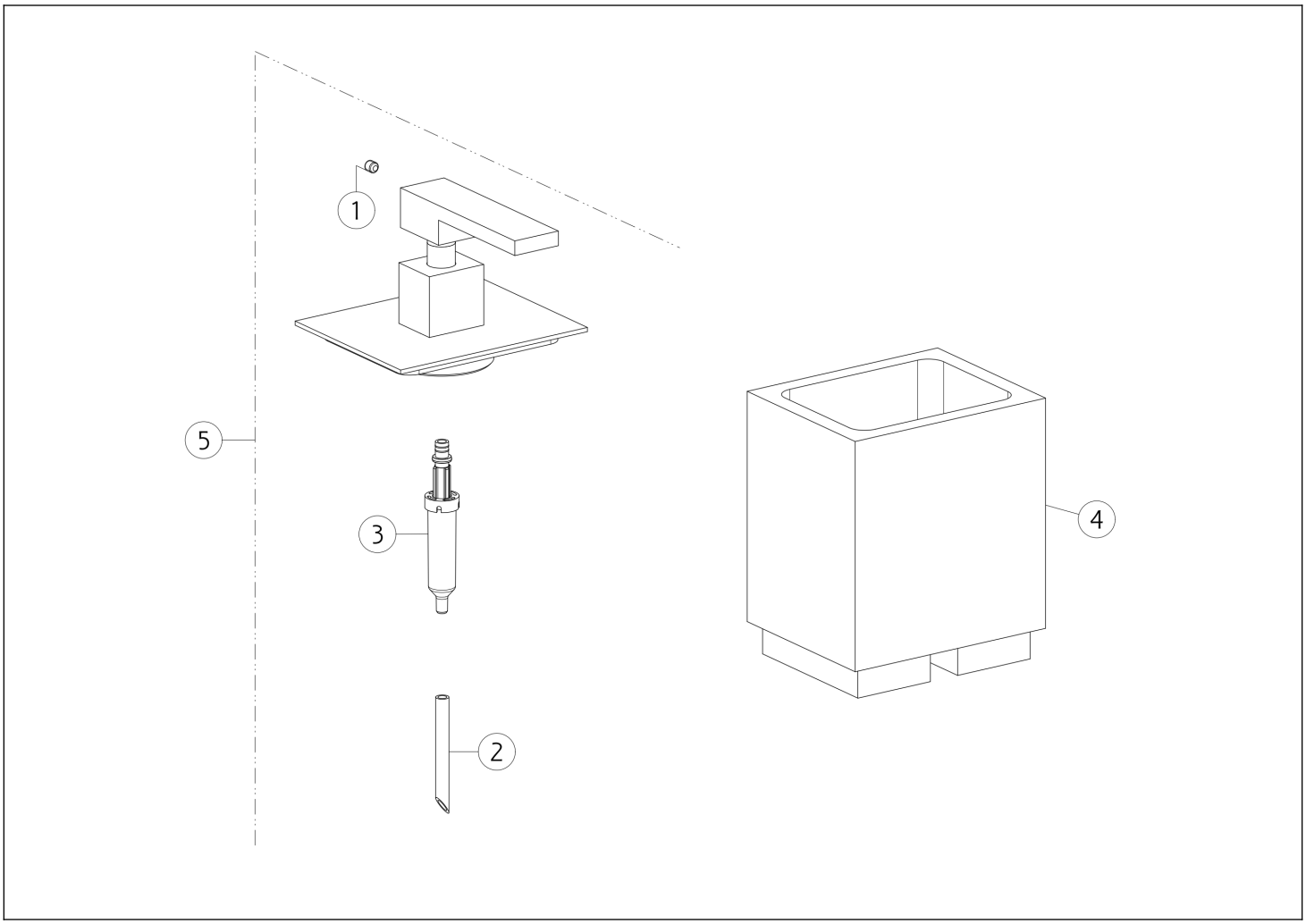

N°	Code	Description
1	SP00610	SCREW
2	SP00198	TUBE
3	SP00040	DISPENSER PUMP

N°	Code	Description
4	PF20831	GLASS
5	SP03770	DISPENSER

Gessi S.p.A. Parco Gessi, 13037 Serravalle Sesia (Vercelli) Italy Tel. +39 0163 454111 Fax. +39 0163 453150 - www.gessi.com - gessi@gessi.it This drawing, as required by law, may not be made public or reproduced without the written authorization of GESSI S.p.A. Copyright GESSI S.p.A.