GESSI

20868

GPF2086820000G000

RETTANGOLO

validity date
≥ 10/2016



Wall-mounted column with paper roll holder and black brush holder

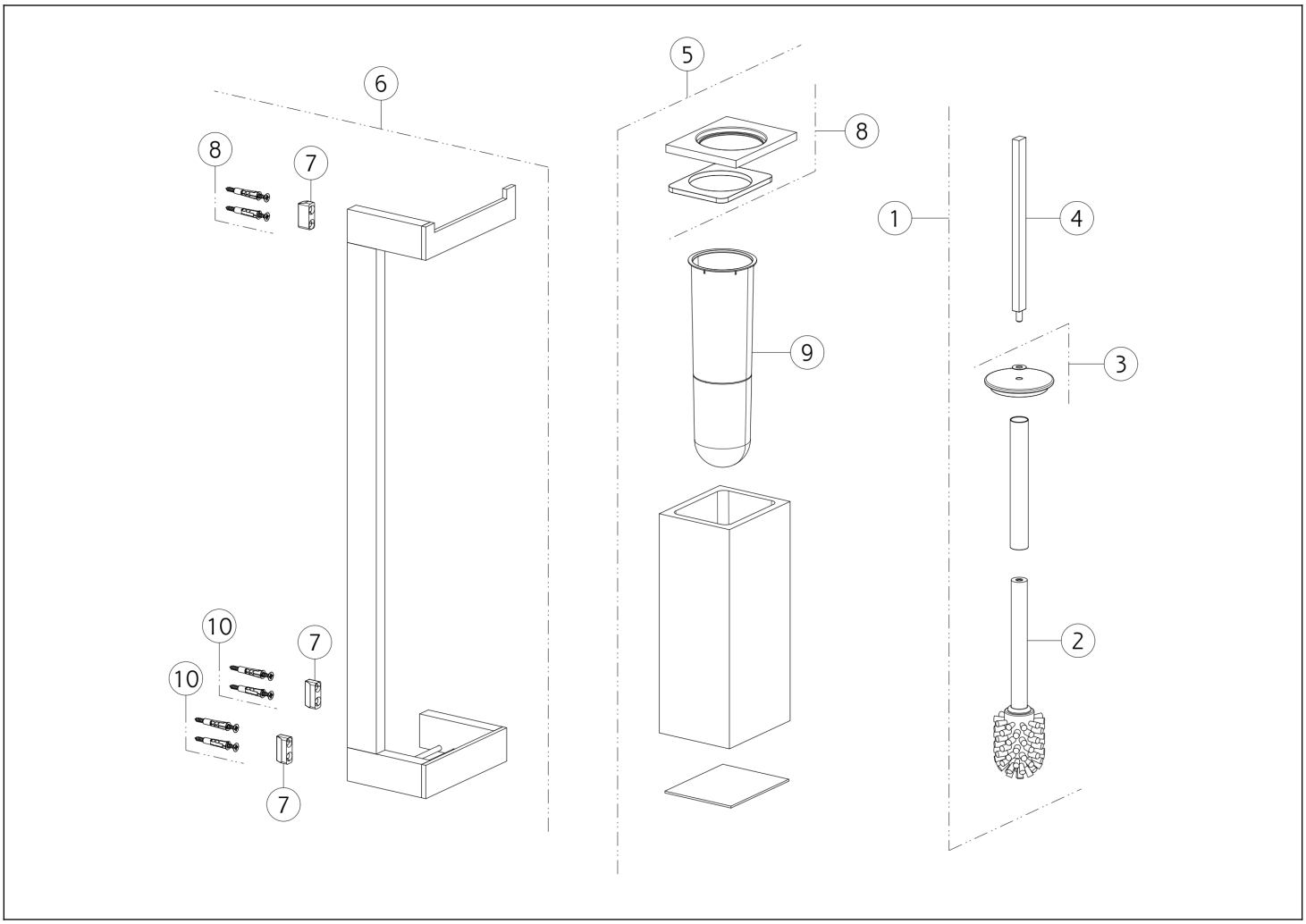

N°	Code	Description
1	SP00944	BRUSH WITH HANDLE
2	SP00870	BRUSH
3	SP00485	DISC
4	SP00681	HANDLE
5	SP00510	BRUSH HOLDER

N°	Code	Description
6	SP04308	WALL SUPPORT
7	SP00822	WALL SUPPORT
8	SP01679	PLUG
9	SP01485	BRUSH HOLDER
10	SP00031	FIXING SET

Gessi S.p.A. Parco Gessi, 13037 Serravalle Sesia (Vercelli) Italy Tel. +39 0163 454111 Fax. +39 0163 453150 - www.gessi.com - gessi@gessi.it This drawing, as required by law, may not be made public or reproduced without the written authorization of GESSI S.p.A. Copyright GESSI S.p.A.