GESSI

20933

GPF2093330000G000

RETTANGOLO

validity date
≥ 01/2017



Standing set with paper roll holder and white brush holder

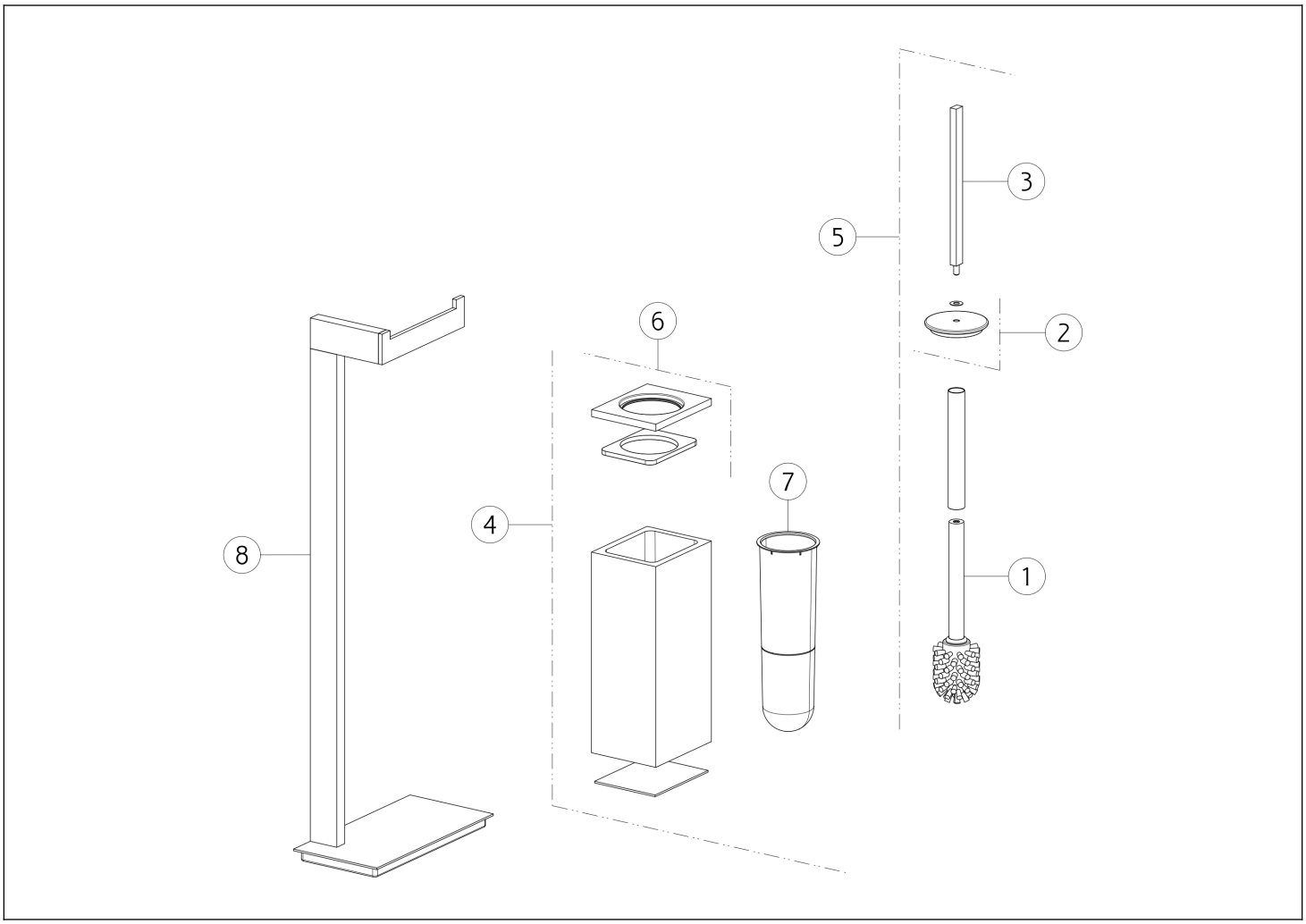

N°	Code	Description
1	SP00870	BRUSH
2	SP00485	DISC
3	SP00681	HANDLE
4	SP01029	BRUSH HOLDER

N°	Code	Description
5	SP00944	BRUSH WITH HANDLE
6	SP01679	PLUG
7	SP01485	BRUSH WITH HANDLE
8	PF29324	SUPPORT

Gessi S.p.A. Parco Gessi, 13037 Serravalle Sesia (Vercelli) Italy Tel. +39 0163 454111 Fax. +39 0163 453150 - www.gessi.com - gessi@gessi.it This drawing, as required by law, may not be made public or reproduced without the written authorization of GESSI S.p.A. Copyright GESSI S.p.A.