GESSI

20947

GPF2094700000G000

RETTANGOLO

validity date
≥ 11/2009

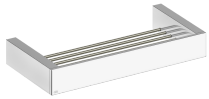

Shelf 30 cm.

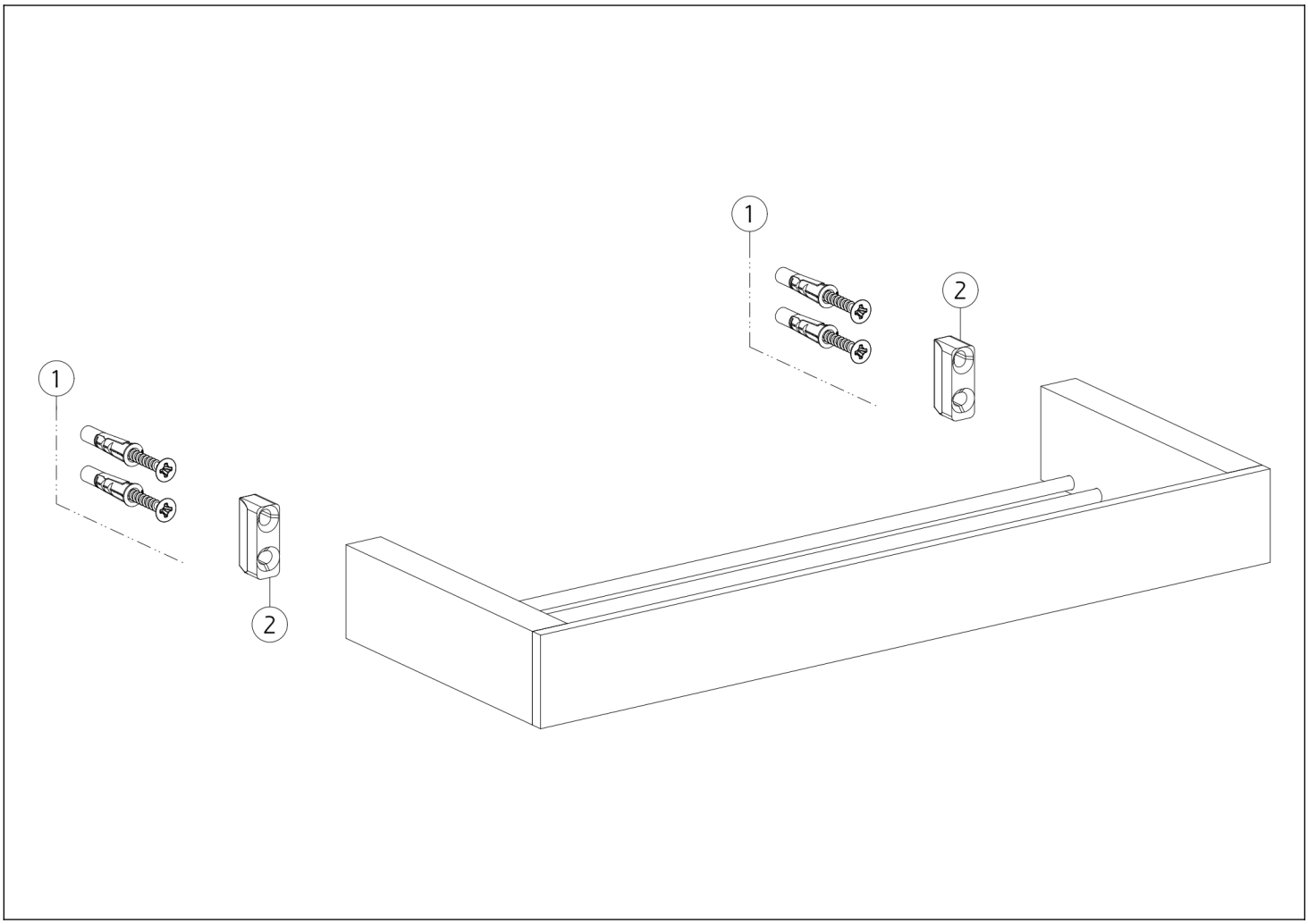

N°	Code	Description
1	SP00031	FIXING SET

N°	Code	Description
2	SP00822	WALL SUPPORT

Gessi S.p.A. Parco Gessi, 13037 Serravalle Sesia (Vercelli) Italy Tel. +39 0163 454111 Fax. +39 0163 453150 - www.gessi.com - gessi@gessi.it This drawing, as required by law, may not be made public or reproduced without the written authorization of GESSI S.p.A. Copyright GESSI S.p.A.