GESSI

23447

GPF2344710000G000

RETTANGOLO

validity date
≥ 11/2009



Wall-mounted thermostatic mixer with Ø306 showerhead, automatic bath/shower diverter, 1,50 m flexible hose and antilimestone handshower

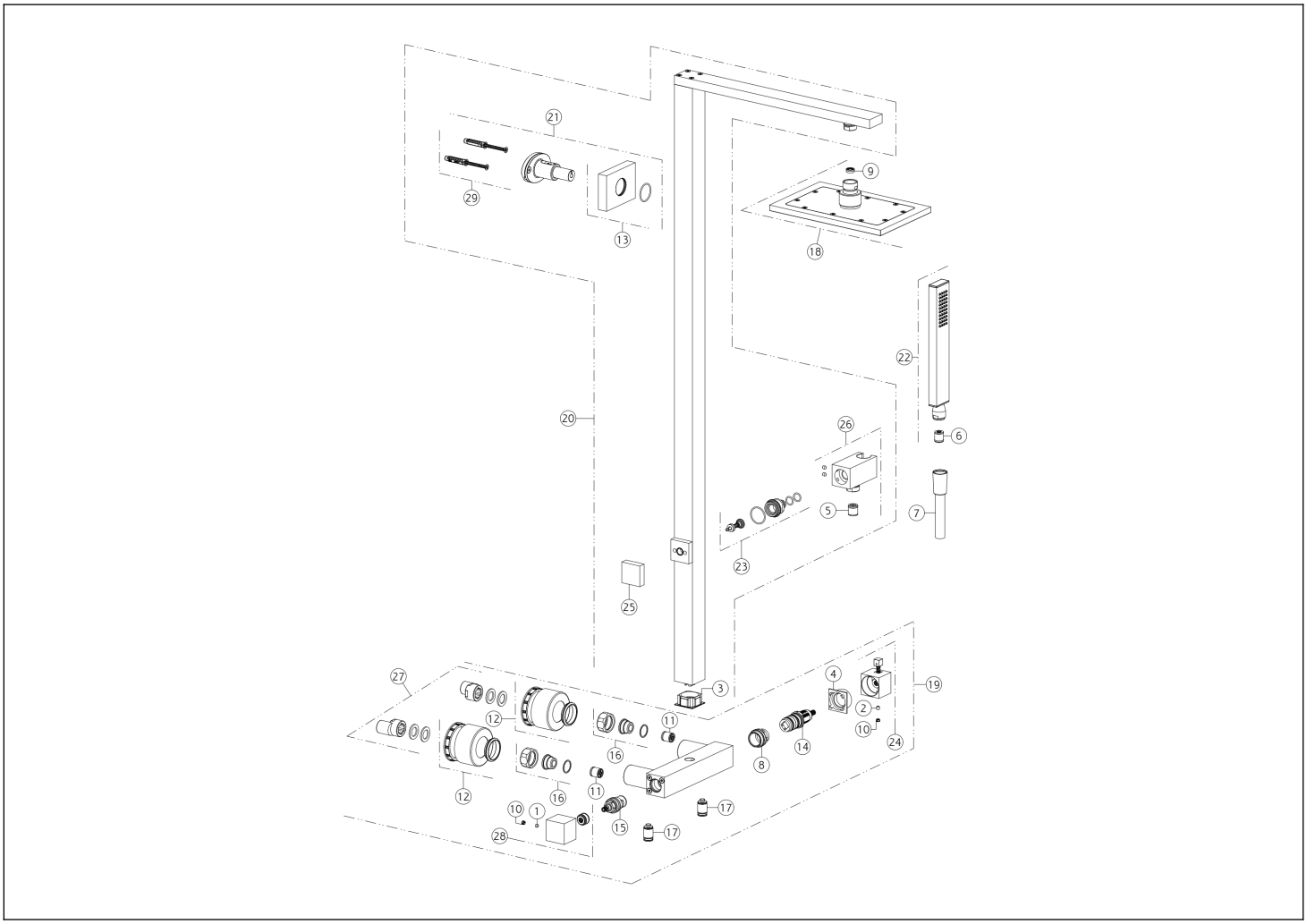

N°	Code	Description
1	SP00137	SCREW
2	SP00610	SCREW
3	SP03841	ANTIFRICTION BUSHING
4	SP03843	INDICATOR RING
5	SP00014	NON RETURN VALVE
6	SP00900	FLOW REGOLATOR
7	PF01637	HOSE
8	SP01185	FIXING RING NUT
9	SP03775	FLOW REGOLATOR
10	SP00002	SCREW COVER
11	SP01183	NON RETURN VALVE
12	SP01009	COVER
13	SP03837	COVER
14	SP01184	THERMOSTATIC CARTRIDGE
15	SP00129	HEADVALVE

N°	Code	Description
16	SP00015	FIXING SET
17	SP01003	FILTER
18	SP03839	SHOWERHEAD
19	SP03844	THERMOSTATIC MIXER
20	SP03848	BODY
21	SP03838	FIXING SET
22	PF20154	HANDSHOWER
23	SP03845	DIVERTER
24	SP01189	HANDLE
25	SP03840	KNOB
26	SP03847	FIXED HANDSHOWER HOOK
27	SP00017	ECCENTRIC JOINT
28	SP03842	HANDLE
29	SP03846	PLUG
30	SP01271	FIXING SET

Gessi S.p.A. Parco Gessi, 13037 Serravalle Sesia (Vercelli) Italy Tel. +39 0163 454111 Fax. +39 0163 453150 - www.gessi.com - gessi@gessi.it This drawing, as required by law, may not be made public or reproduced without the written authorization of GESSI S.p.A. Copyright GESSI S.p.A.