GESSI

33081

GPF33081300000G000

ACCIAIO

validity date
≥ 04/2017



QUADRO 300 Wall-mounted showerhead

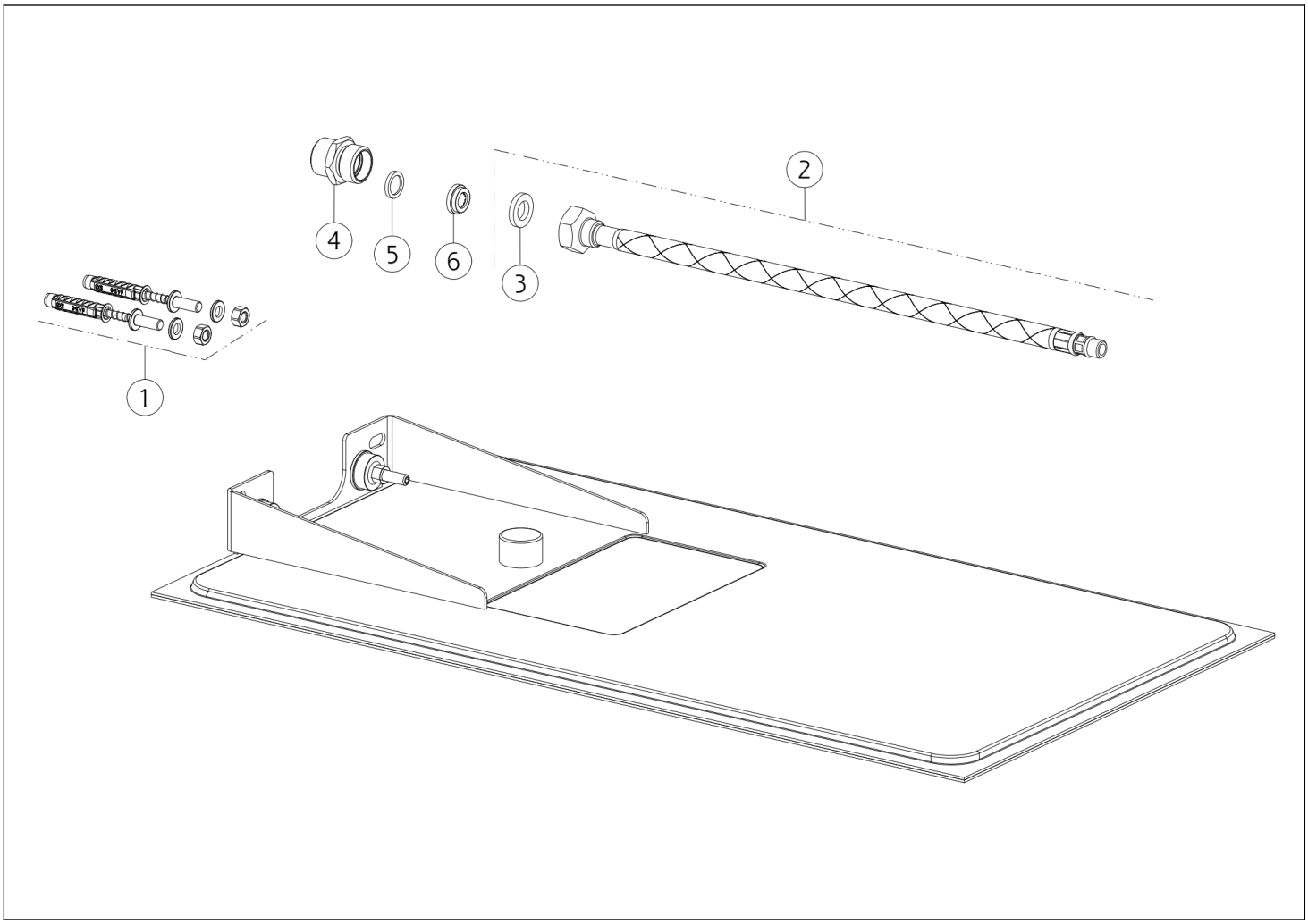

N°	Code	Description
1	SP01034	FIXING SET
2	SP01024	HOSE
3	SP00341	GASKET

N°	Code	Description
4	SP01033	NIPPLE
5	SP00249	GASKET
6	SP02191	FLOW REGOLATOR

Gessi S.p.A. Parco Gessi, 13037 Serravalle Sesia (Vercelli) Italy Tel. +39 0163 454111 Fax. +39 0163 453150 - www.gessi.com - gessi@gessi.it This drawing, as required by law, may not be made public or reproduced without the written authorization of GESSI S.p.A. Copyright GESSI S.p.A.