GESSI

33601

GPF33601000000G000

GOCCIA

validity date
≥ 06/2016



Basin mixer, short spout, flexible connections, without waste. Swivelling spout.

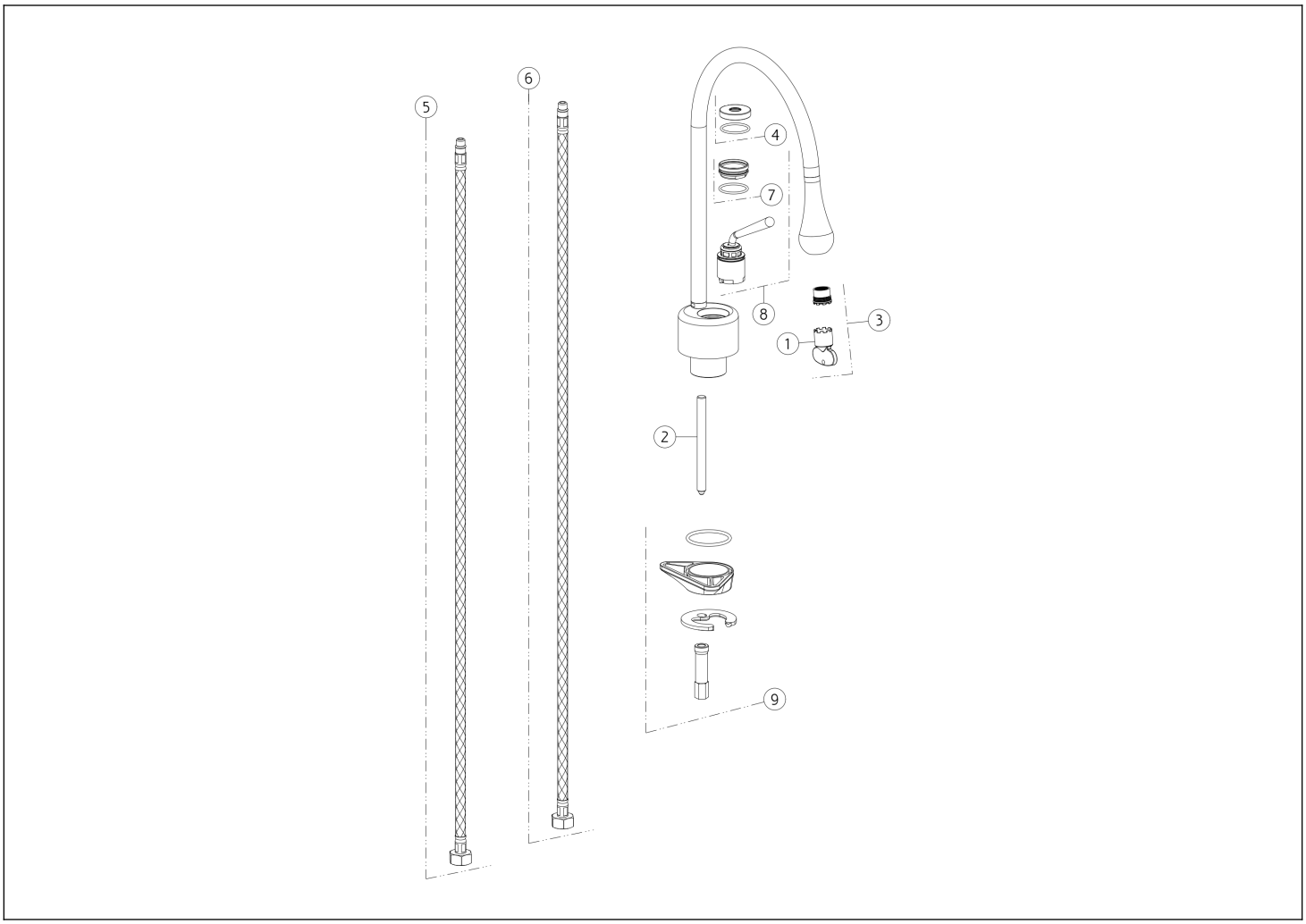

N°	Code	Description
1	SP00504	SPECIAL TOOL
2	SP00067	TIE ROD
3	SP02670	AERATOR
4	SP03566	FINISHING RING NUT
5	SP01287	RED SUPPLY HOSE

N°	Code	Description
6	SP01286	BLU SUPPLY HOSE
7	SP01278	FIXING RING NUT
8	SP02255	CARTRIDGE
9	SP01155	FIXING SET

Gessi S.p.A. Parco Gessi, 13037 Serravalle Sesia (Vercelli) Italy Tel. +39 0163 454111 Fax. +39 0163 453150 - www.gessi.com - gessi@gessi.it This drawing, as required by law, may not be made public or reproduced without the written authorization of GESSI S.p.A. Copyright GESSI S.p.A.