GESSI

33607

GPF33607000000G000

GOCCIA

validity date
≥ 10/2009



Bidet mixer, flexible connections, without waste. Swivelling spout.

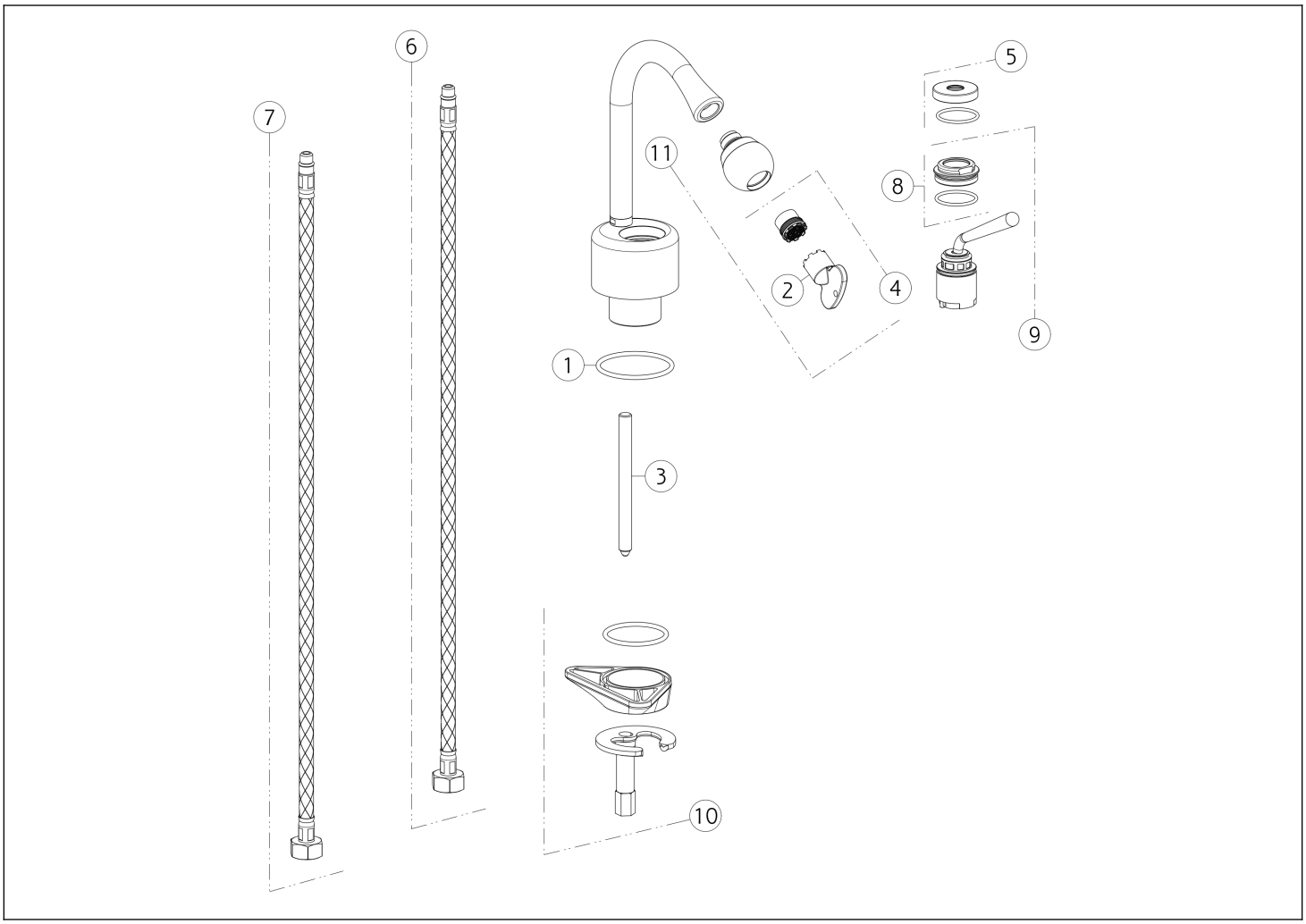

N°	Code	Description
1	SP03694	GASKET
2	SP00504	KEY
3	SP00067	TIE ROD
4	SP02670	AERATOR
5	SP03566	FINISHING RING NUT
6	SP01284	BLUE SUPPLY HOSE

N°	Code	Description
7	SP01285	RED SUPPLY HOSE
8	SP01278	FIXING RING NUT
9	SP02255	CARTRIDGE
10	SP01155	FIXING KIT
11	SP03693	JOINT

Gessi S.p.A. Parco Gessi, 13037 Serravalle Sesia (Vercelli) Italy Tel. +39 0163 454111 Fax. +39 0163 453150 - www.gessi.com - gessi@gessi.it This drawing, as required by law, may not be made public or reproduced without the written authorization of GESSI S.p.A. Copyright GESSI S.p.A.