GESSI

33609

GPF33609000000G000

GOCCIA

validity date
≥ 09/2015



High basin mixer, medium spout, flexible connections, without waste. Swivelling spout.

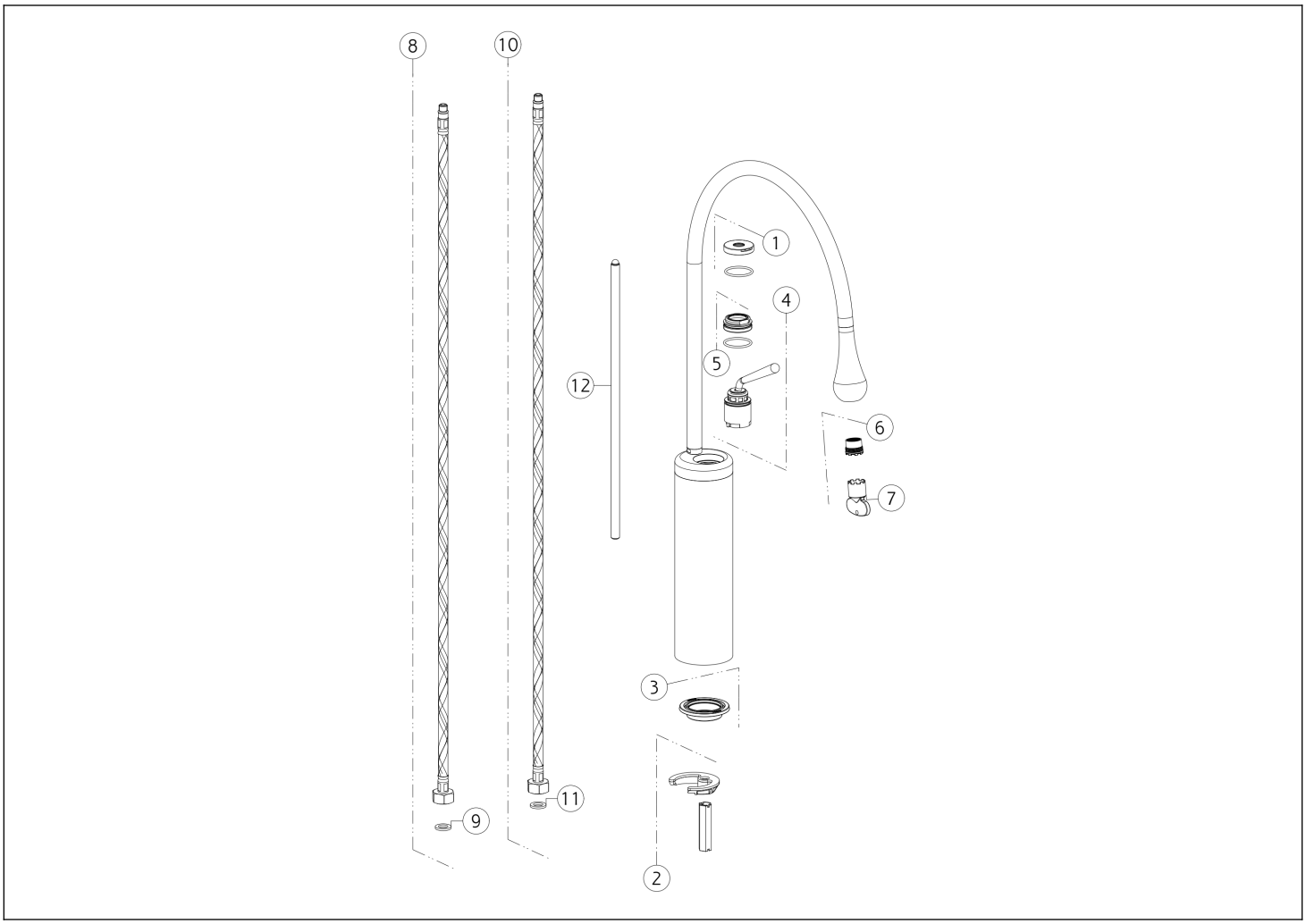

N°	Code	Description
1	SP03566	FINISHING RING NUT
2	SP00174	FIXING SET
3	SP03607	GASKET
4	SP02255	CARTRIDGE
5	SP01278	FIXING RING NUT
6	SP02670	AERATOR

N°	Code	Description
7	SP00504	SPECIAL TOOL
8	SP01287	RED SUPPLY HOSE
9	SP00064	GASKET
10	SP01286	BLU SUPPLY HOSE
11	SP00064	GASKET
12	SP01163	TIE ROD

 This drawing, as required by law, may not be made public or reproduced without the written authorization of GESSI S.p.A. Copyright GESSI S.p.A.