GESSI

33642

GPF33642000000G000

GOCCIA

validity date
≥ 10/2009



Sliding rail with antilimestone handshower, 1,50 m flexible hose and water outlet

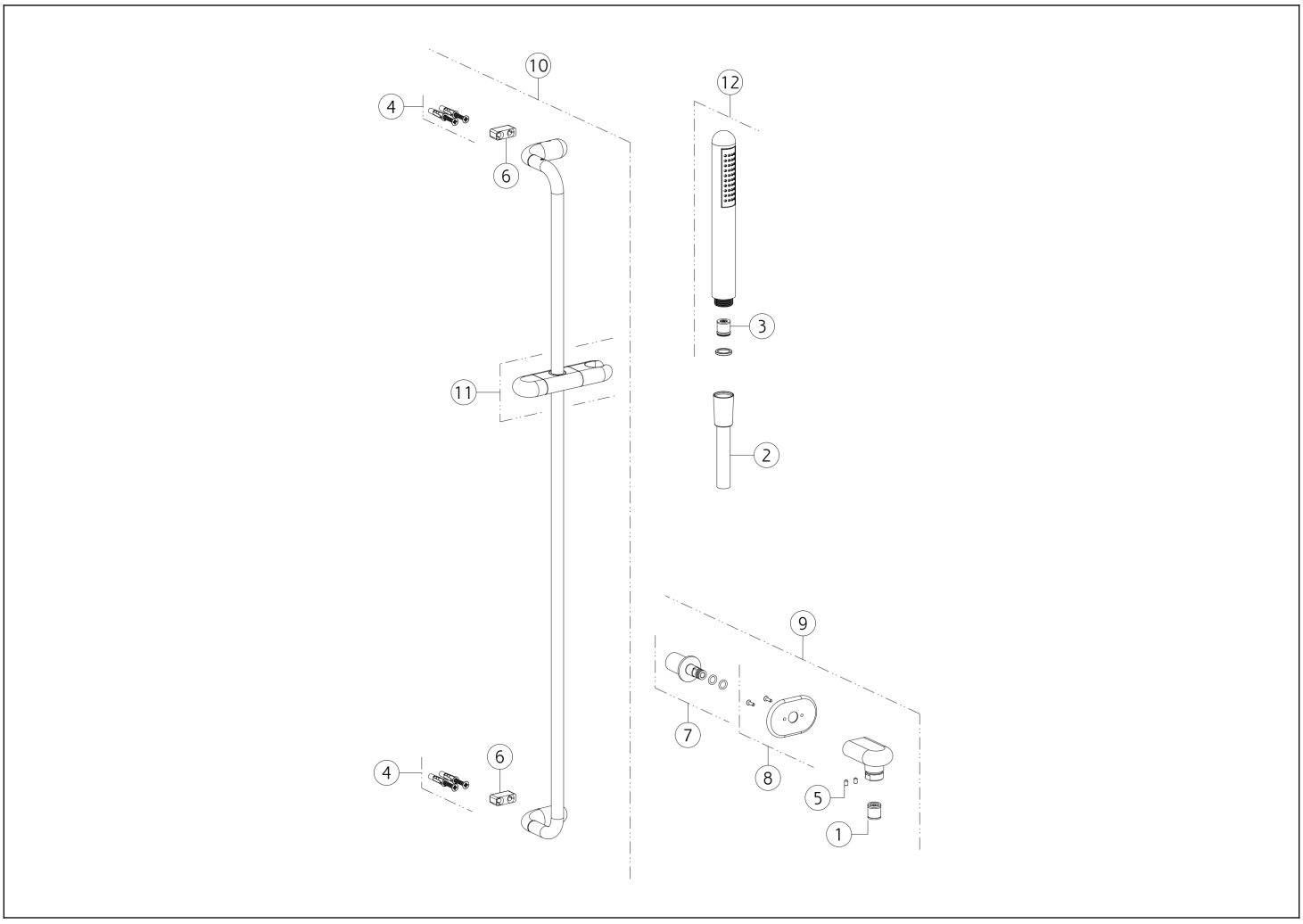

N°	Code	Description
1	SP00014	NON RETURN VALVE
2	PF01637	HOSE
3	SP01634	FLOW REGOLATOR
4	SP00031	FIXING SET
5	SP02093	SCREW
6	SP00822	WALL SUPPORT

N°	Code	Description
7	SP04287	NIPPLE
8	SP04288	COVER
9	PF33769	CONNECTION WATER OUTLET
10	PF33644	SLIDING RAIL
11	SP04283	SLIDING SUPPORT
12	PF33754	HANDSHOWER

 This drawing, as required by law, may not be made public or reproduced without the written authorization of GESSI S.p.A. Copyright GESSI S.p.A.