GESSI

33723

GPF3372300000G000

GOCCIA

validity date
≥ 02/2012



Wall-mounted spout, spout length on request,with separate control (not included).

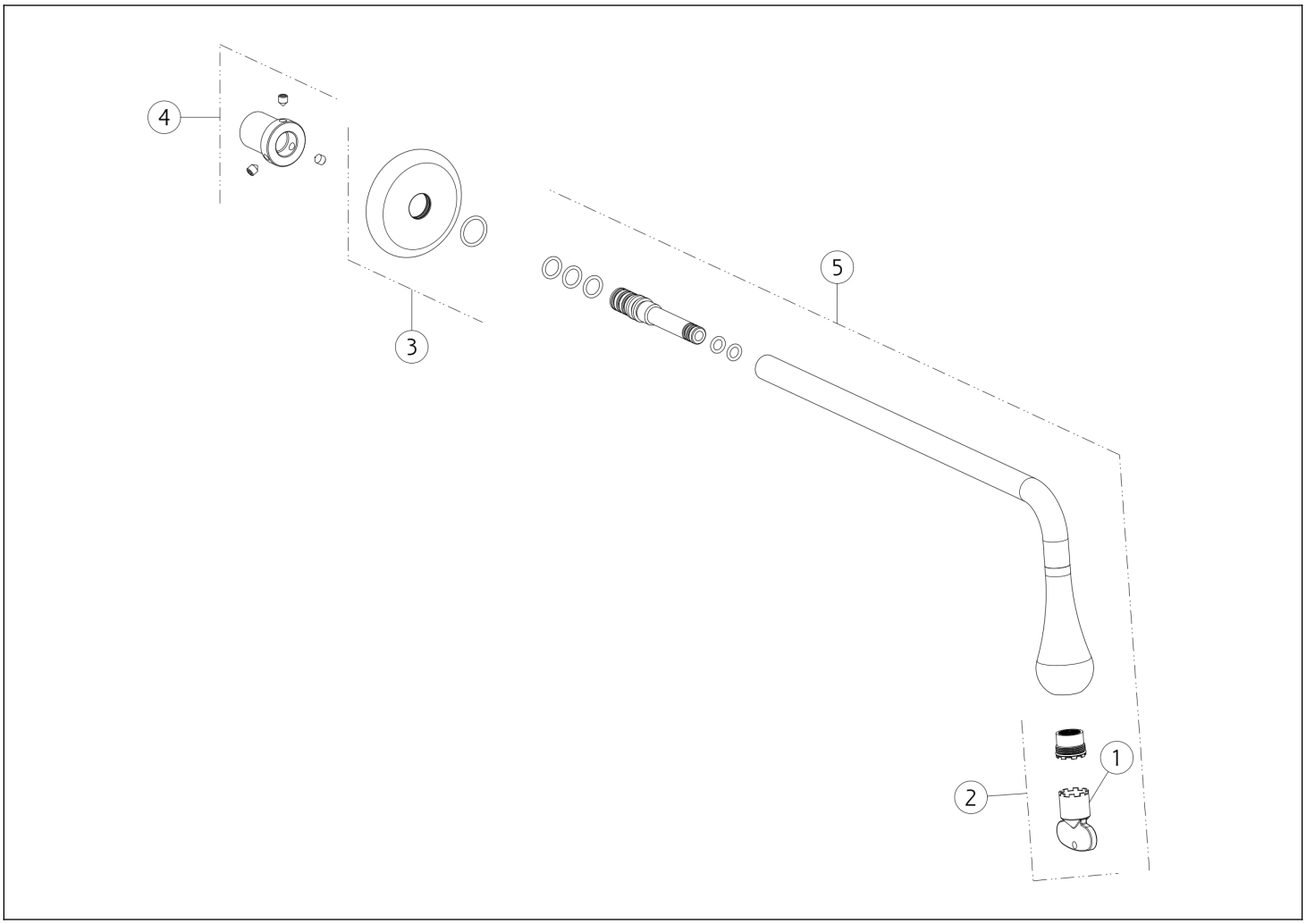

N°	Code	Description
1	SP00504	SPECIAL TOOL
2	SP02670	AERATOR
3	SP05077	COVER

N°	Code	Description
4	SP05078	NIPPLE
5	SP05079	SPOUT

Gessi S.p.A. Parco Gessi, 13037 Serravalle Sesia (Vercelli) Italy Tel. +39 0163 454111 Fax. +39 0163 453150 - www.gessi.com - gessi@gessi.it This drawing, as required by law, may not be made public or reproduced without the written authorization of GESSI S.p.A. Copyright GESSI S.p.A.