GESSI

33773

GPF3377300000G000

GOCCIA

validity date
≥ 03/2011



Shower set with water outlet, 1,50 m flexible hose and antilimestone handshower

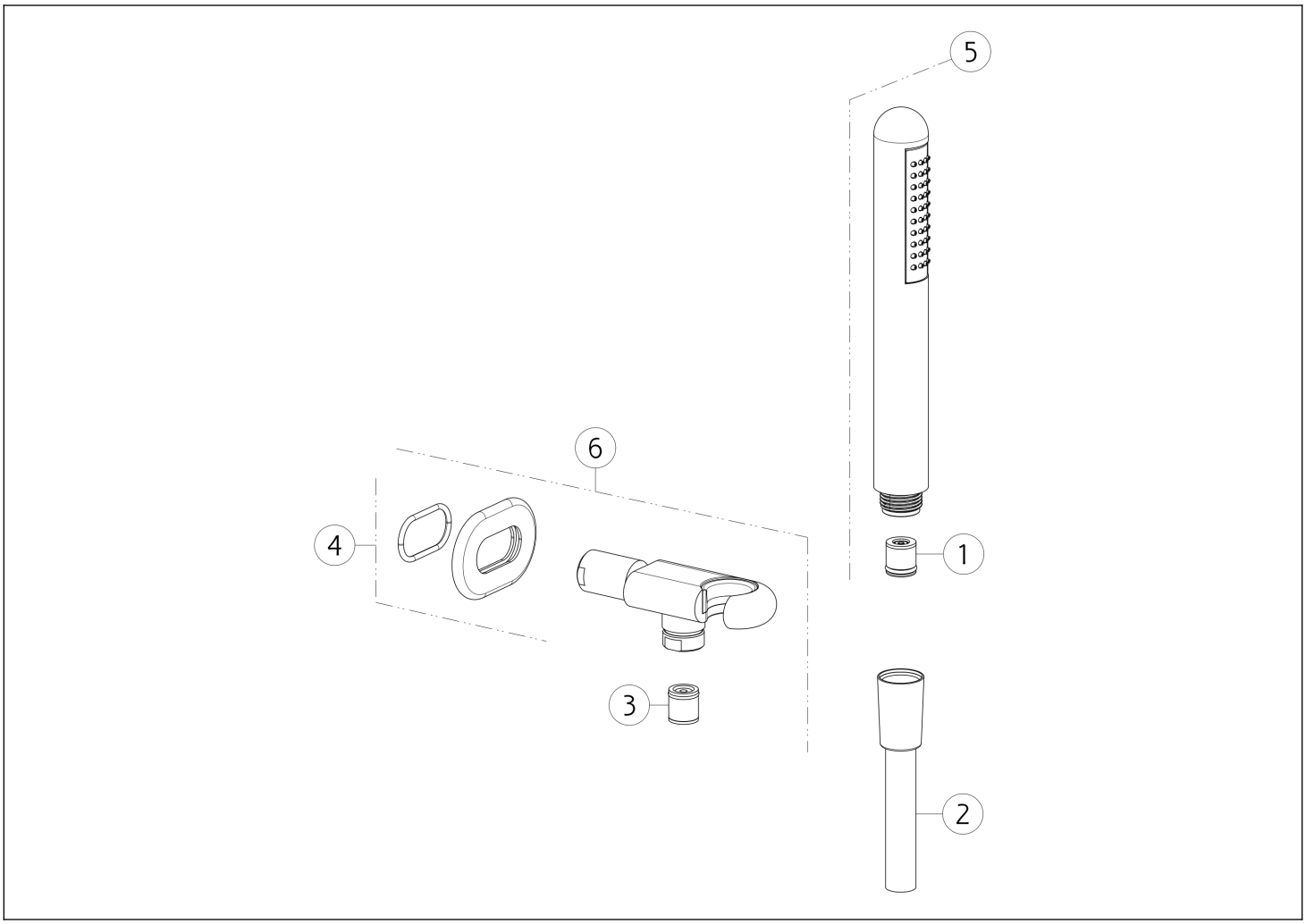

N°	Code	Description
1	SP01634	FLOW LIMITING VALVE
2	PF01637	HOSE
3	SP00014	NON RETURN VALVE

N°	Code	Description
4	SP03728	ROSETTE
5	PF33754	HANDSHOWER
6	PF33761	FIXED HAND SHOWER HOLDER

Gessi S.p.A. Parco Gessi, 13037 Serravalle Sesia (Vercelli) Italy Tel. +39 0163 454111 Fax. +39 0163 453150 - www.gessi.com - gessi@gessi.it This drawing, as required by law, may not be made public or reproduced without the written authorization of GESSI S.p.A. Copyright GESSI S.p.A.