GESSI

33823

GPF3382320000G000

RILIEVO

validity date
≥ 06/2023



Wall-mounted Hydrobrush for sanitary ceramics with safety valve and 1/2" connection.

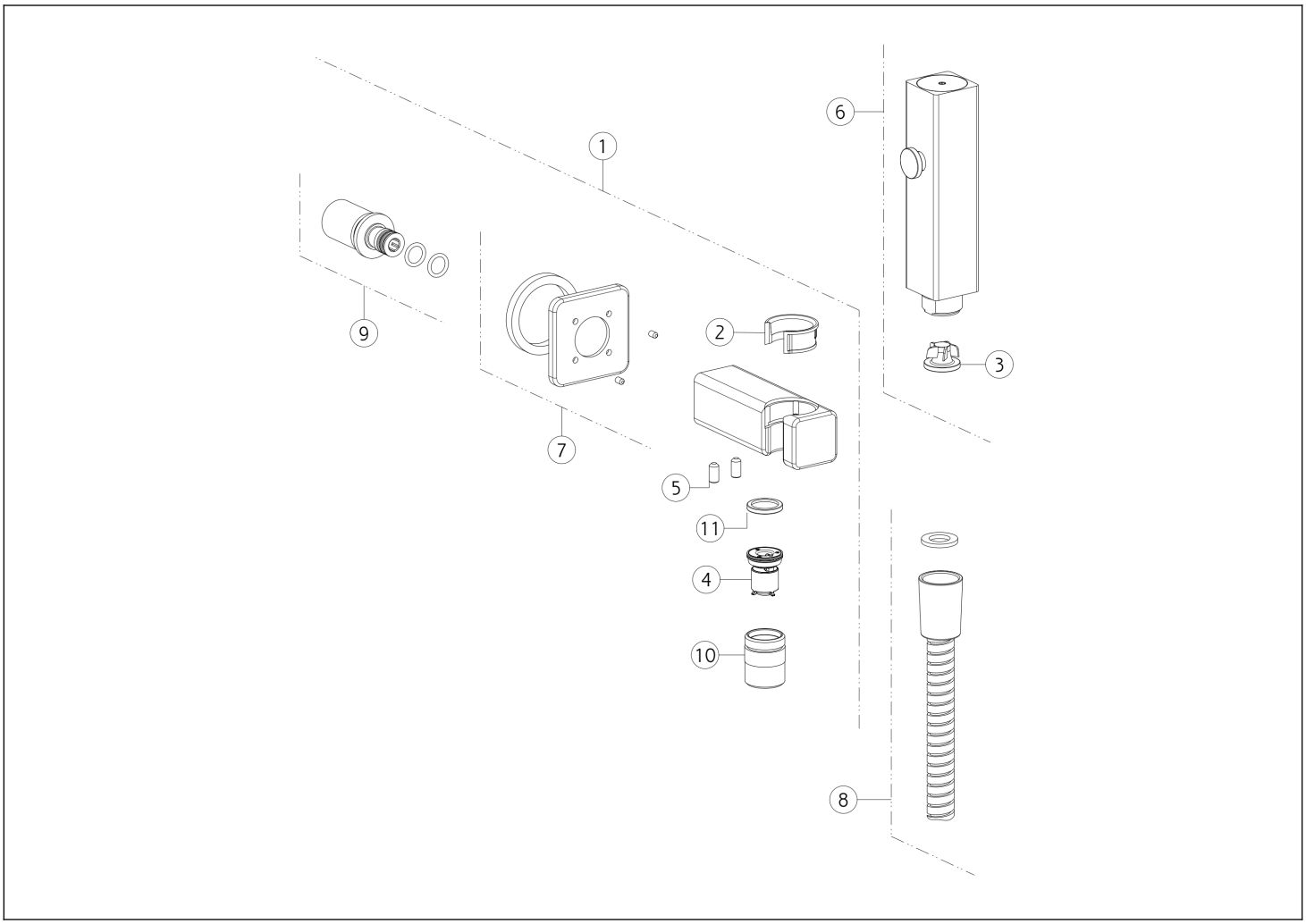

N°	Code	Description
1	SP03740	CONNECTION WATER OUTLET WITH FIXED HOOK
2	SP03654	BUSH
3	SP05471	FLOW REGOLATOR
4	SP04270	VALVE
5	SP01352	SCREW
6	SP03741	HANDSHOWER

N°	Code	Description
7	SP04275	COVER
8	SP02636	HOSE
9	SP01816	NIPPLE
10	SP04276	NIPPLE
11	SP04574	FILTER GASKET

Gessi S.p.A. Parco Gessi, 13037 Serravalle Sesia (Vercelli) Italy Tel. +39 0163 454111 Fax. +39 0163 453150 - www.gessi.com - gessi@gessi.it This drawing, as required by law, may not be made public or reproduced without the written authorization of GESSI S.p.A. Copyright GESSI S.p.A.