GESSI

33846

GPF3384600000G000

GOCCIA

validity date
≥ 03/2015



External parts for thermostatic mixer, three-way diverter

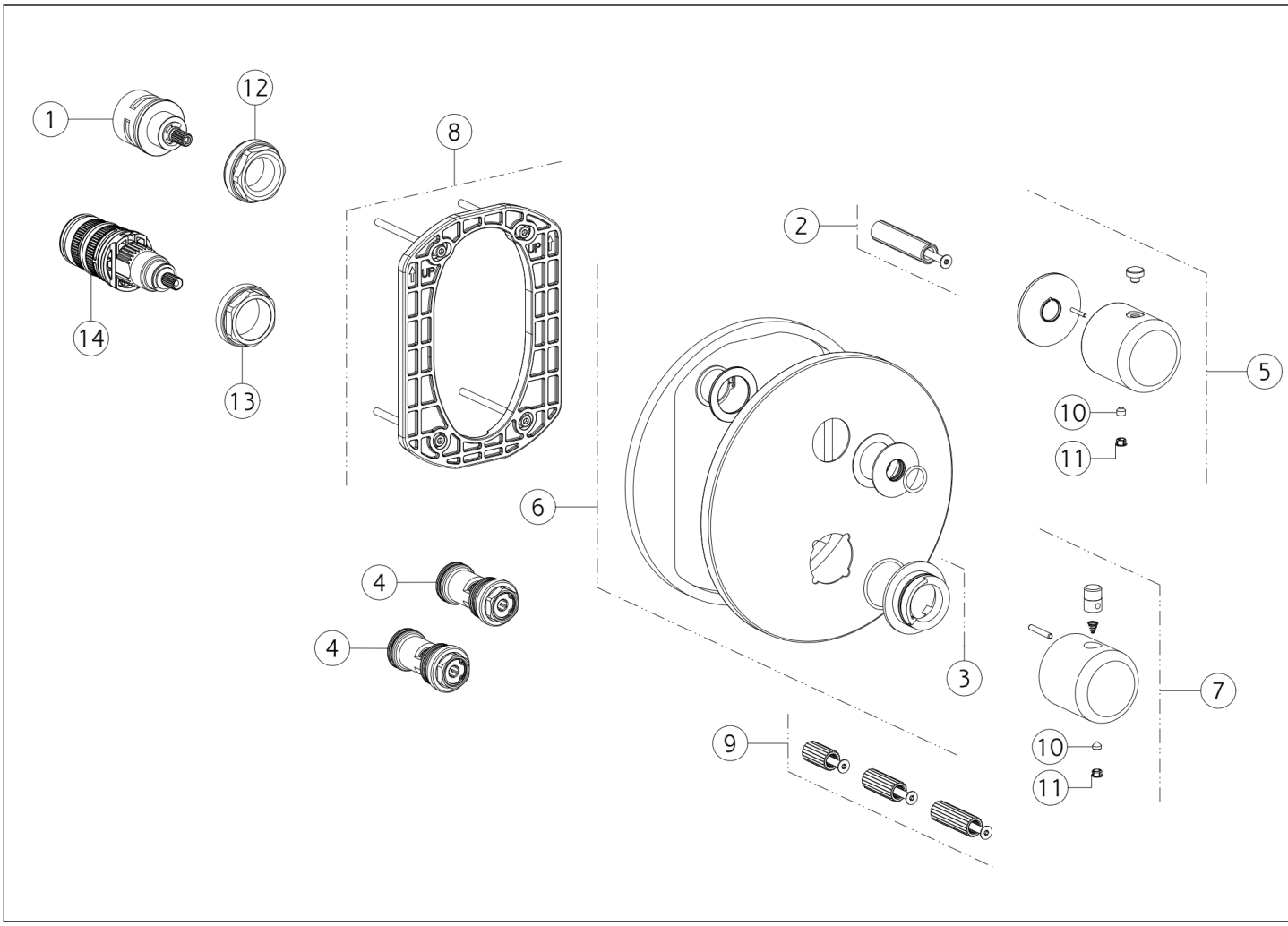

N°	Code	Description
1	SP01794	DIVERTER
2	SP01946	EXTENSION
3	SP01739	INDICATOR RING
4	SP01942	FILTER
5	SP02030	HANDLE
6	SP02243	FINISHING PLATE
7	SP03778	HANDLE

N°	Code	Description
8	SP01868	SUB PLATE
9	SP01940	EXTENSION
10	SP00137	SCREW
11	SP00002	SCREW COVER
12	SP01945	LOCK NUT
13	SP01941	FIXING RING NUT
14	SP01936	THERMOSTATIC CARTRIDGE

Gessi S.p.A. Parco Gessi, 13037 Serravalle Sesia (Vercelli) Italy Tel. +39 0163 454111 Fax. +39 0163 453150 - www.gessi.com - gessi@gessi.it This drawing, as required by law, may not be made public or reproduced without the written authorization of GESSI S.p.A. Copyright GESSI S.p.A.