GESSI

38100

GPF3810000000G000

GOCCIA

validity date
≥ 03/2016



45 cm towel rail

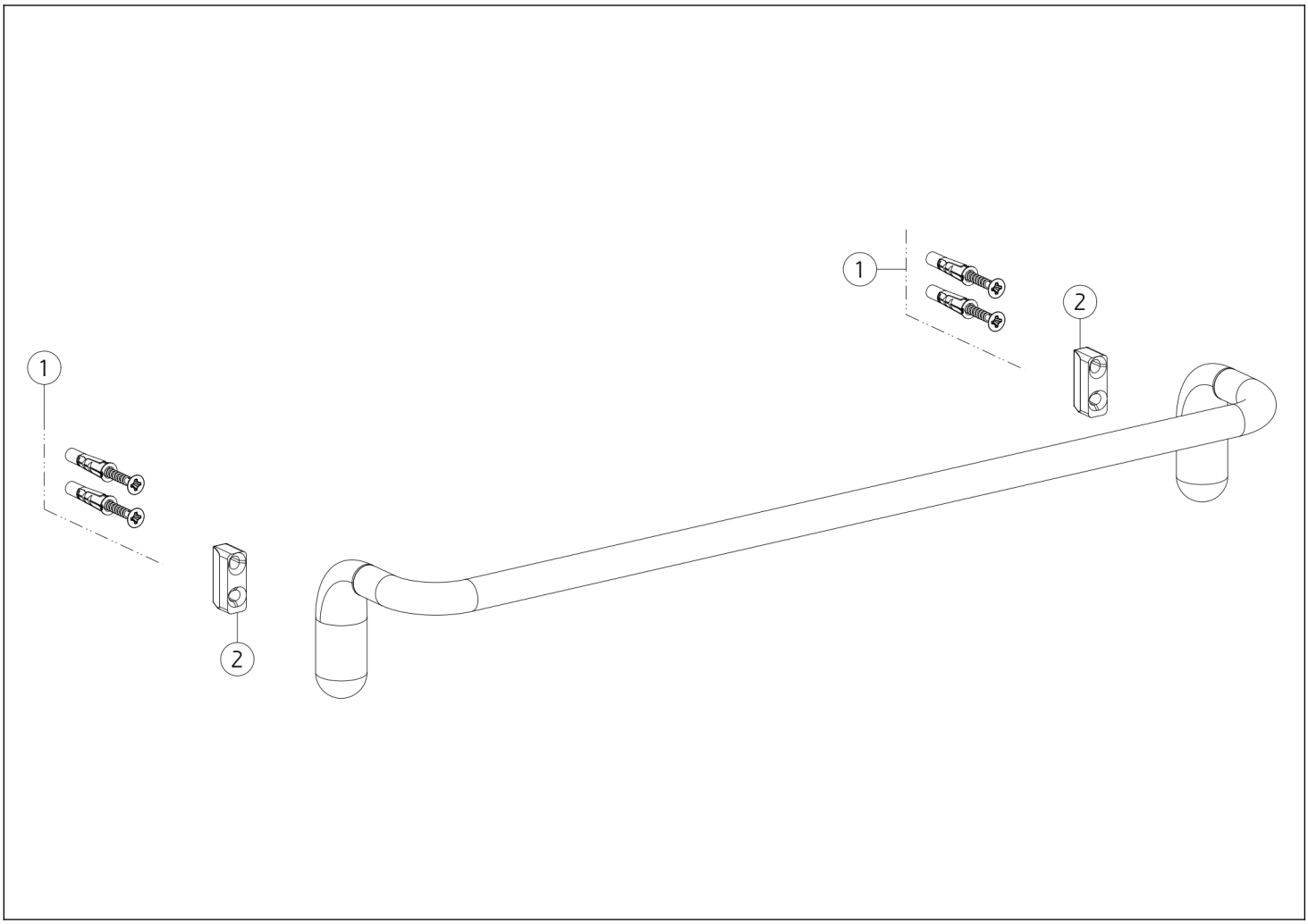

N°	Code	Description
1	SP00031	FIXING SET

N°	Code	Description
2	SP00882	HOSE

 This drawing, as required by law, may not be made public or reproduced without the written authorization of GESSI S.p.A. Copyright GESSI S.p.A.