GESSI

38143

GPF3814300000G000

GOCCIA

validity date
≥ 01/2011



60 cm ceiling-mounted towel rail

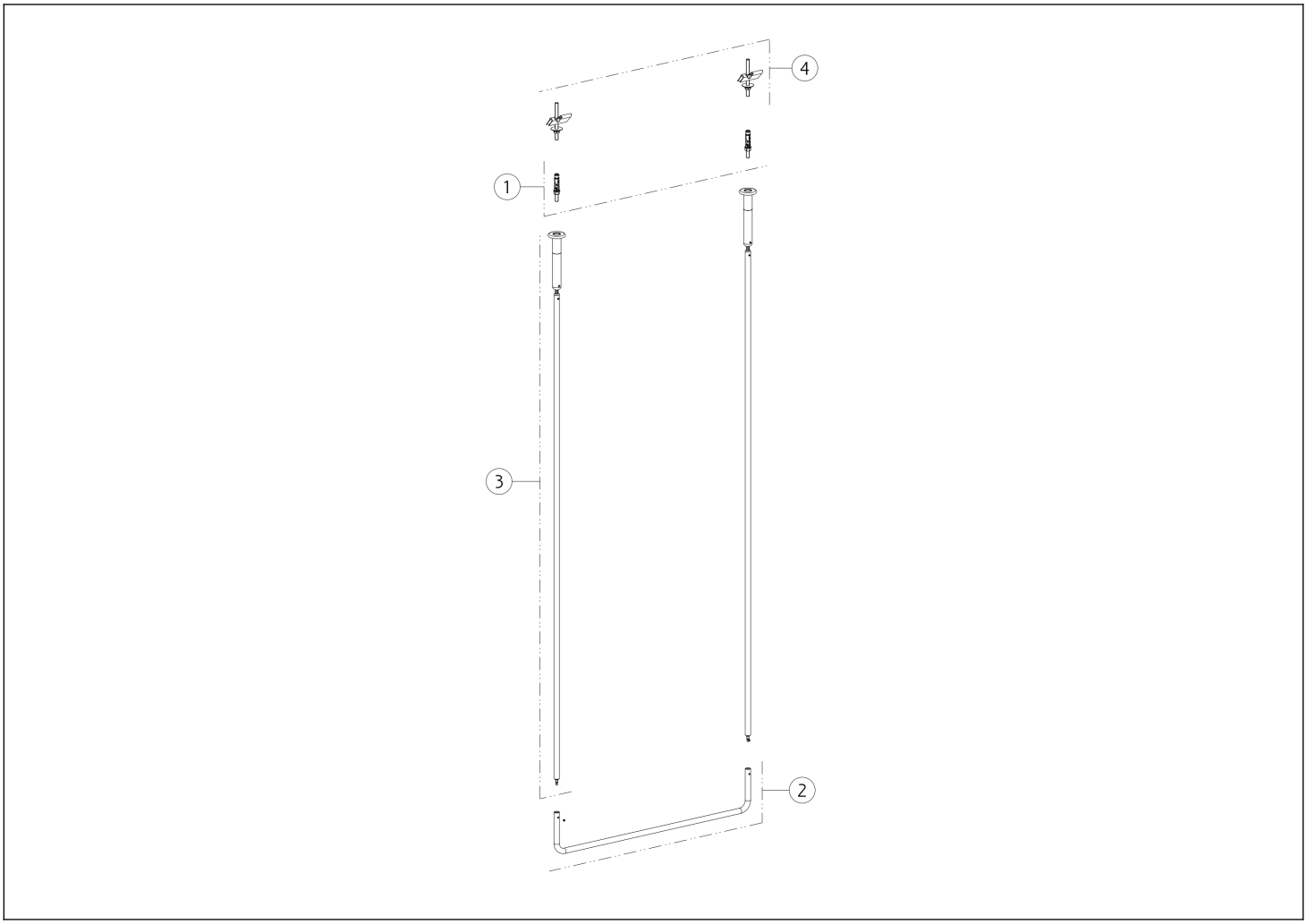

N°	Code	Description
1	SP01452	FIXING KIT
2	SP05004	ROD

N°	Code	Description
3	SP04927	ROD
4	PF29724	FIXING KIT

 This drawing, as required by law, may not be made public or reproduced without the written authorization of GESSI S.p.A. Copyright GESSI S.p.A.