GESSI

38144

GPF3814400000G000

GOCCIA

validity date
≥ 09/2015



45 cm ceiling-mounted towel rail

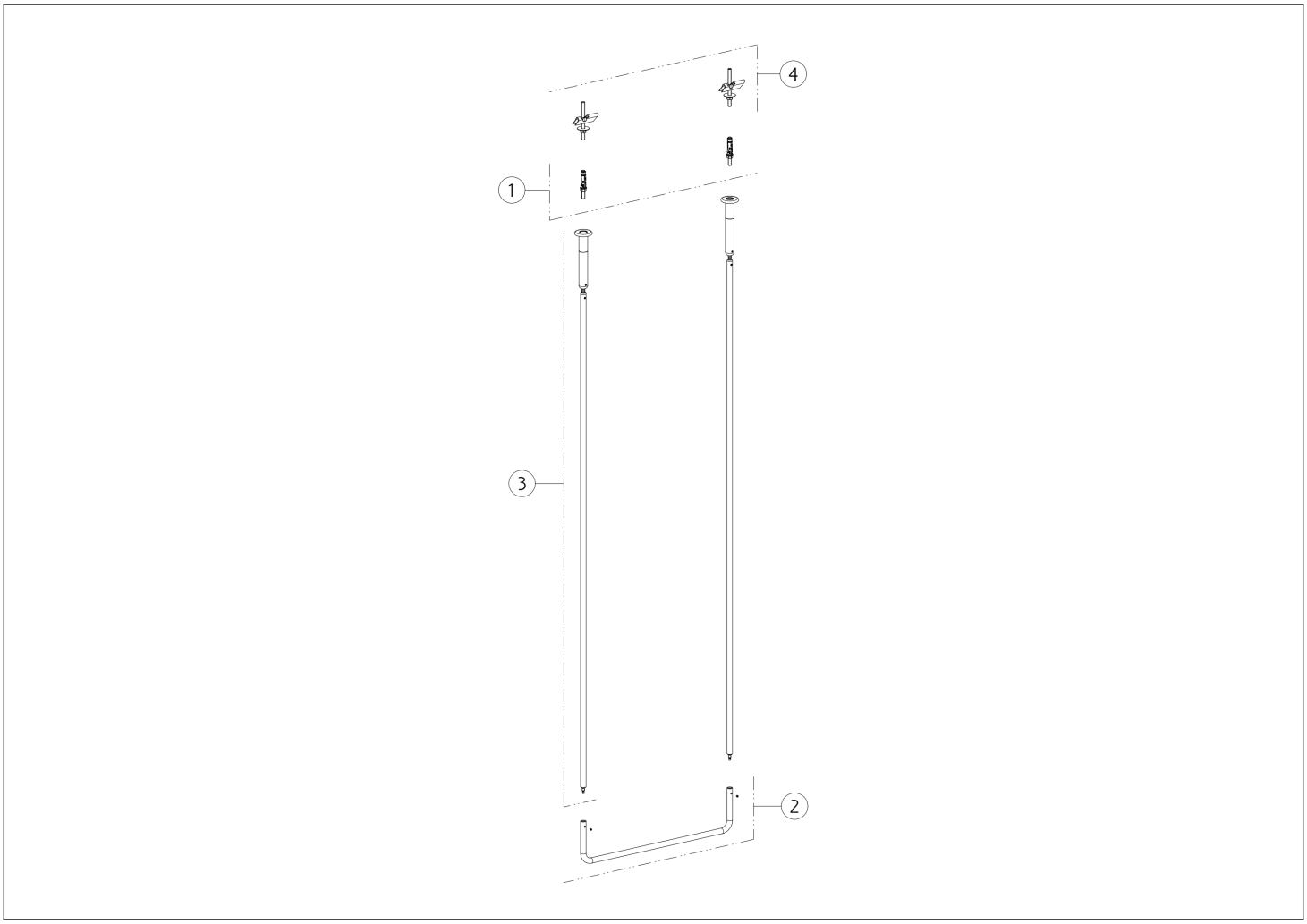

N°	Code	Description
1	SP01452	FIXING KIT
2	SP01453	ROD

N°	Code	Description
3	SP04927	ROD
4	PF29724	FIXING KIT

Gessi S.p.A. Parco Gessi, 13037 Serravalle Sesia (Vercelli) Italy Tel. +39 0163 454111 Fax. +39 0163 453150 - www.gessi.com - gessi@gessi.it This drawing, as required by law, may not be made public or reproduced without the written authorization of GESSI S.p.A. Copyright GESSI S.p.A.