GESSI

38716

GPF3871600000G000

HI-FI

validity date
≥ 10/2023



External parts for thermostatic mixer for three simultaneous functions, with push-button on/off controls.

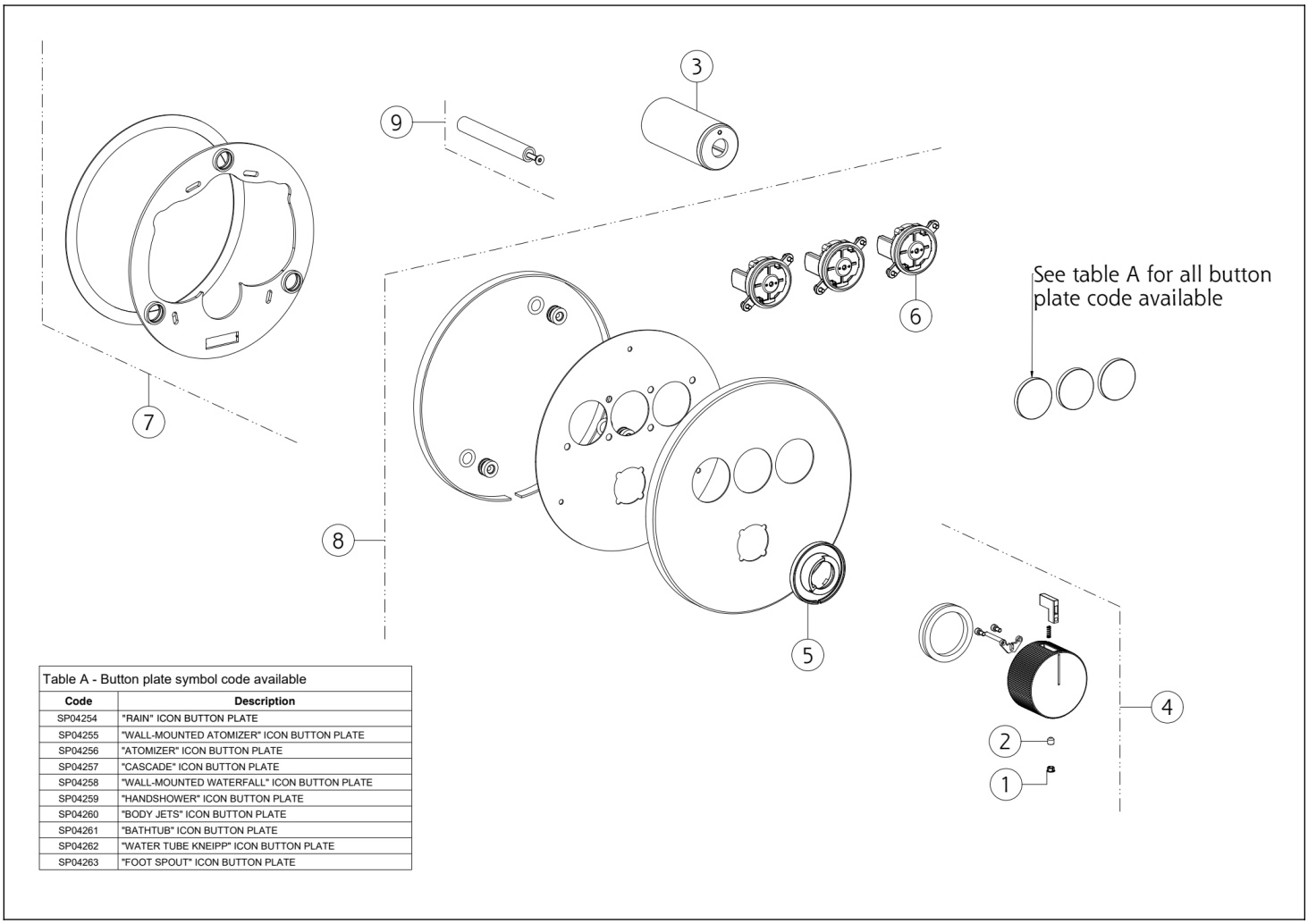

Table A - Button plate symbol code available

Code	Description
SP04254	"RAIN" ICON BUTTON PLATE
SP04255	"WALL-MOUNTED ATOMIZER" ICON BUTTON PLATE
SP04256	"ATOMIZER" ICON BUTTON PLATE
SP04257	"CASCADE" ICON BUTTON PLATE
SP04258	"WALL-MOUNTED WATERFALL" ICON BUTTON PLATE
SP04259	"HANDSHOWER" ICON BUTTON PLATE
SP04260	"BODY JETS" ICON BUTTON PLATE
SP04261	"BATHTUB" ICON BUTTON PLATE
SP04262	"WATER TUBE KNEIPP" ICON BUTTON PLATE
SP04263	"FOOT SPOUT" ICON BUTTON PLATE

N°	Code	Description
1	SP00002	SCREW COVER
2	SP00610	SCREW
3	SP03514	FIXING SET
4	SP02841	HANDLE
5	SP02846	INDICATOR RING

N°	Code	Description
6	SP03453	PUSH BUTTON
7	SP05084	SUB PLATE
8	SP05260	FINISHING PLATE
9	SP03384	SPACER
10	SP04575	EXTENSION

Gessi S.p.A. Parco Gessi, 13037 Serravalle Sesia (Vercelli) Italy Tel. +39 0163 454111 Fax. +39 0163 453150 - www.gessi.com - gessi@gessi.it This drawing, as required by law, may not be made public or reproduced without the written authorization of GESSI S.p.A. Copyright GESSI S.p.A.