GESSI

38718

GPF3871800000G000

HI-FI

fecha de validez
≥ 08/2023



Partes externas para mezclador TERMOSTATICO 2 vias simultaneas, con pulsador on-off

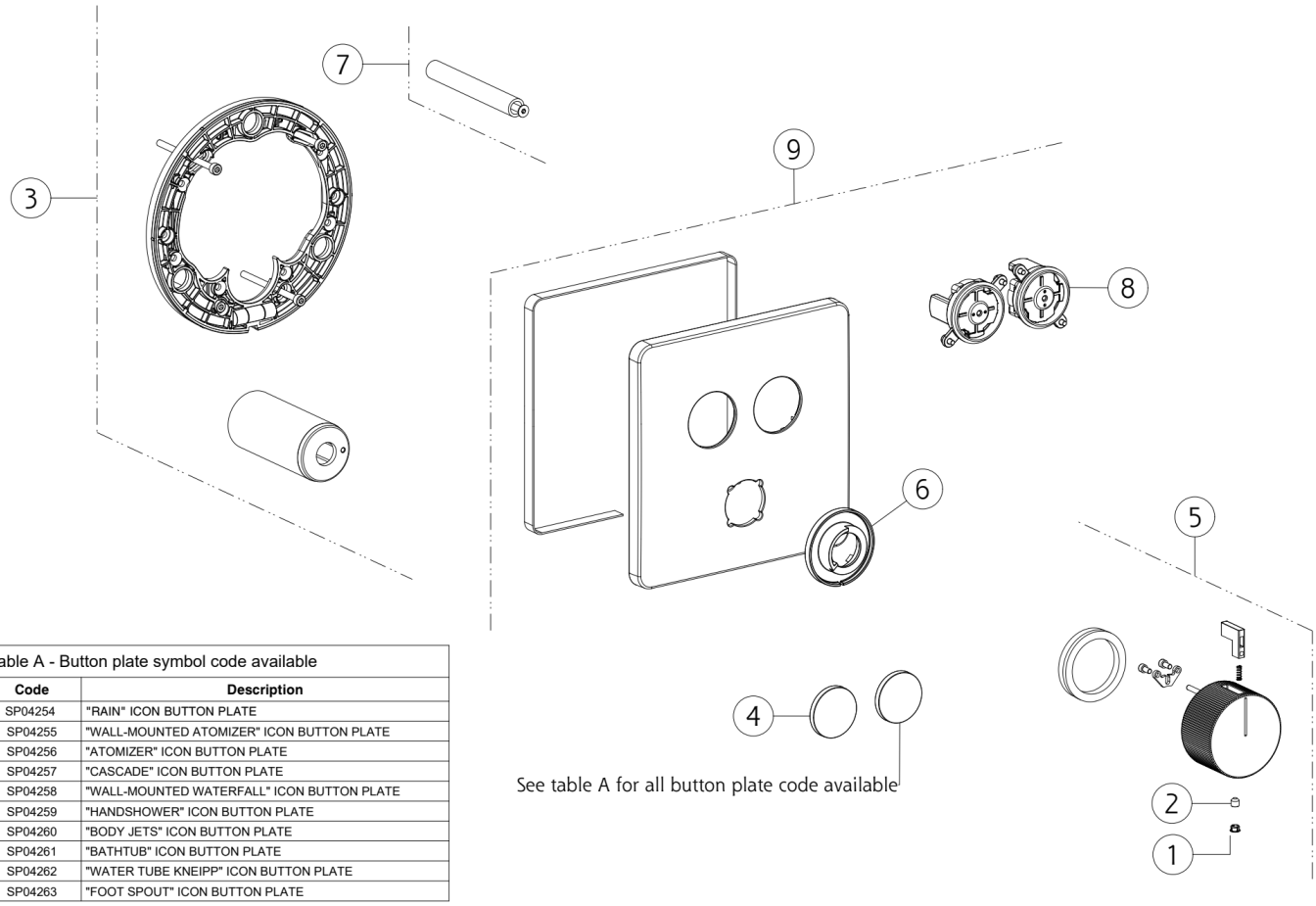

Table A - Button plate symbol code available

Code	Description
SP04254	"RAIN" ICON BUTTON PLATE
SP04255	"WALL-MOUNTED ATOMIZER" ICON BUTTON PLATE
SP04256	"ATOMIZER" ICON BUTTON PLATE
SP04257	"CASCADE" ICON BUTTON PLATE
SP04258	"WALL-MOUNTED WATERFALL" ICON BUTTON PLATE
SP04259	"HANDSHOWER" ICON BUTTON PLATE
SP04260	"BODY JETS" ICON BUTTON PLATE
SP04261	"BATHTUB" ICON BUTTON PLATE
SP04262	"WATER TUBE KNEIPP" ICON BUTTON PLATE
SP04263	"FOOT SPOUT" ICON BUTTON PLATE

N°	Código	Descripción
1	SP00002	TAPA DE TORNILLO
2	SP00610	TORNILLO
3	SP04714	PLACA SECUNDARIA
4	SP04254	PLACA DE BOTÓN
5	SP02841	ASA

N°	Código	Descripción
6	SP02846	ANILLO INDICADOR
7	SP04575	EXTENSIÓN
8	SP03453	BOTÓN
9	SP04715	PLACA DE ACABADO