GESSI

43028

GPF4302810000G000

RETTANGOLO

validity date
≥ 01/2015



External parts for wall-mounted thermostatic high-capacity mixer. Vertical/horizontal setting up with FOUR SEPARATE EXITS

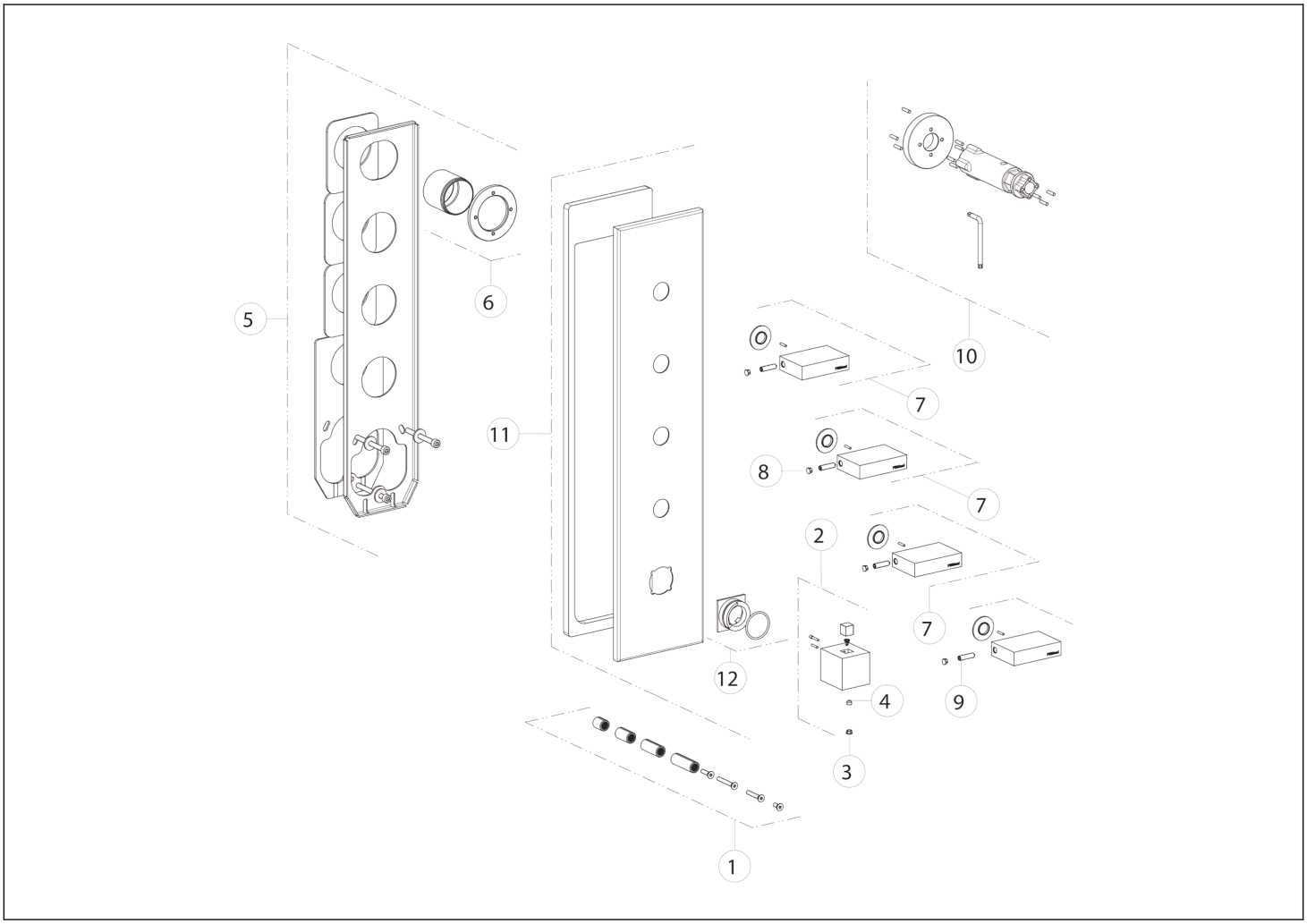

N°	Code	Description
1	SP01931	EXTENSION
2	SP01924	HANDLE
3	SP00002	SCREW COVER
4	SP00137	SCREW
5	SP01929	SUB PLATE
6	SP01930	BUSH

N°	Code	Description
7	SP01925	HANDLE
8	SP00002	SCREW COVER
9	SP01182	SCREW
10	SP01932	SPECIAL TOOL
11	SP01928	FINISHING PLATE
12	SP01927	INDICATOR RING

Gessi S.p.A. Parco Gessi, 13037 Serravalle Sesia (Vercelli) Italy Tel. +39 0163 454111 Fax. +39 0163 453150 - www.gessi.com - gessi@gessi.it This drawing, as required by law, may not be made public or reproduced without the written authorization of GESSI S.p.A. Copyright GESSI S.p.A.