GESSI

43064

GPF4306420000G000

TONDO

validity date
≥ 11/2014



External parts for wall-mounted thermostatic high-capacity mixer. Vertical/horizontal setting up with TWO SEPARATE EXITS

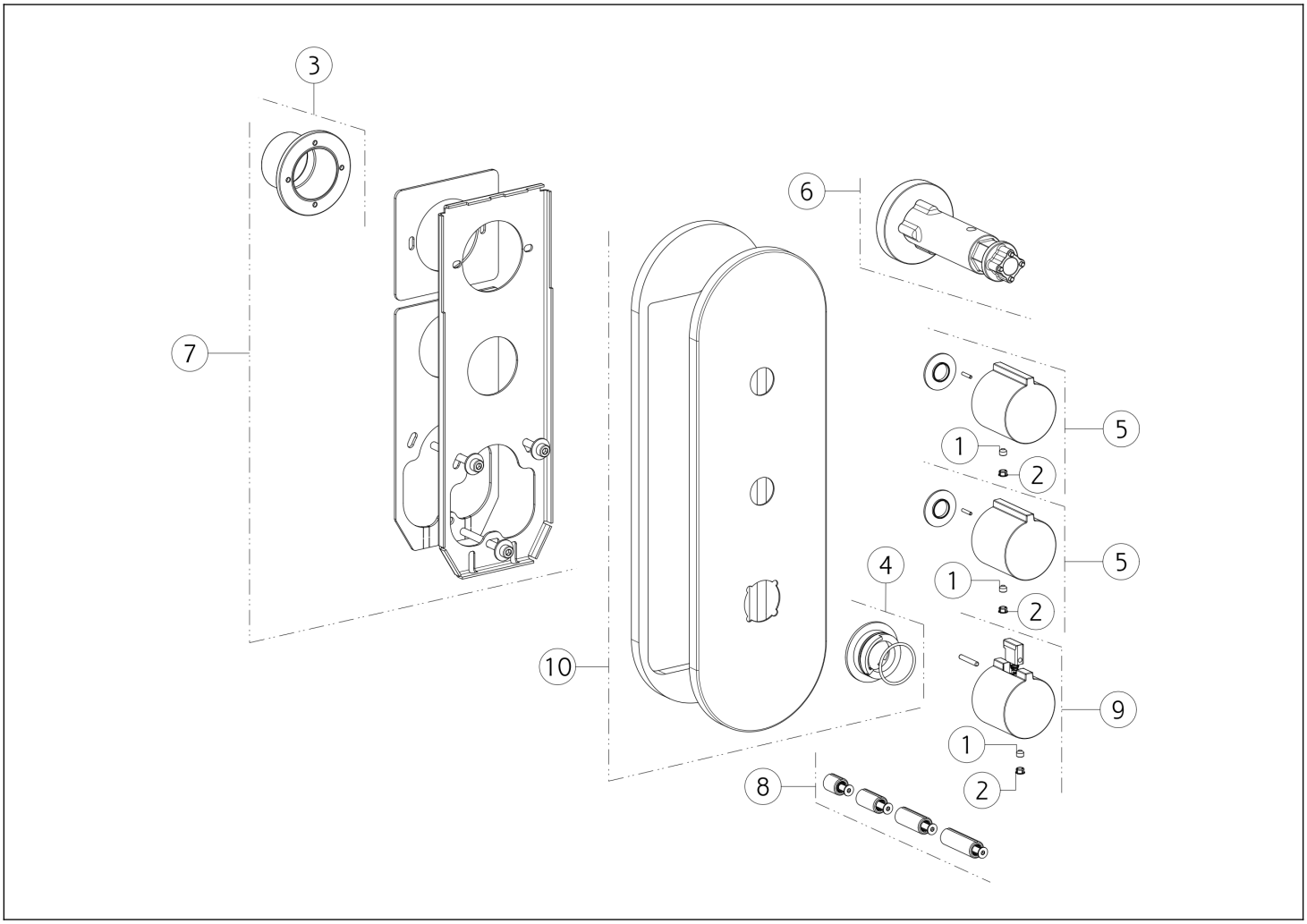

N°	Code	Description
1	SP00137	SCREW
2	SP00002	SCREW COVER
3	SP01930	BUSH
4	SP01739	INDICATOR RING
5	SP03905	HANDLE

N°	Code	Description
6	SP01932	SPECIAL TOOL
7	SP02042	SUB PLATE
8	SP01931	EXTENSION
9	SP02083	HANDLE WITH LOGO
10	SP01562	FINISHING PLATE

 This drawing, as required by law, may not be made public or reproduced without the written authorization of GESSI S.p.A. Copyright GESSI S.p.A.