GESSI

43066

GPF4306620000G000

TONDO

validity date
≥ 10/2015



External parts for wall-mounted thermostatic high-capacity mixer. Vertical/horizontal setting up with THREE SEPARATE EXITS

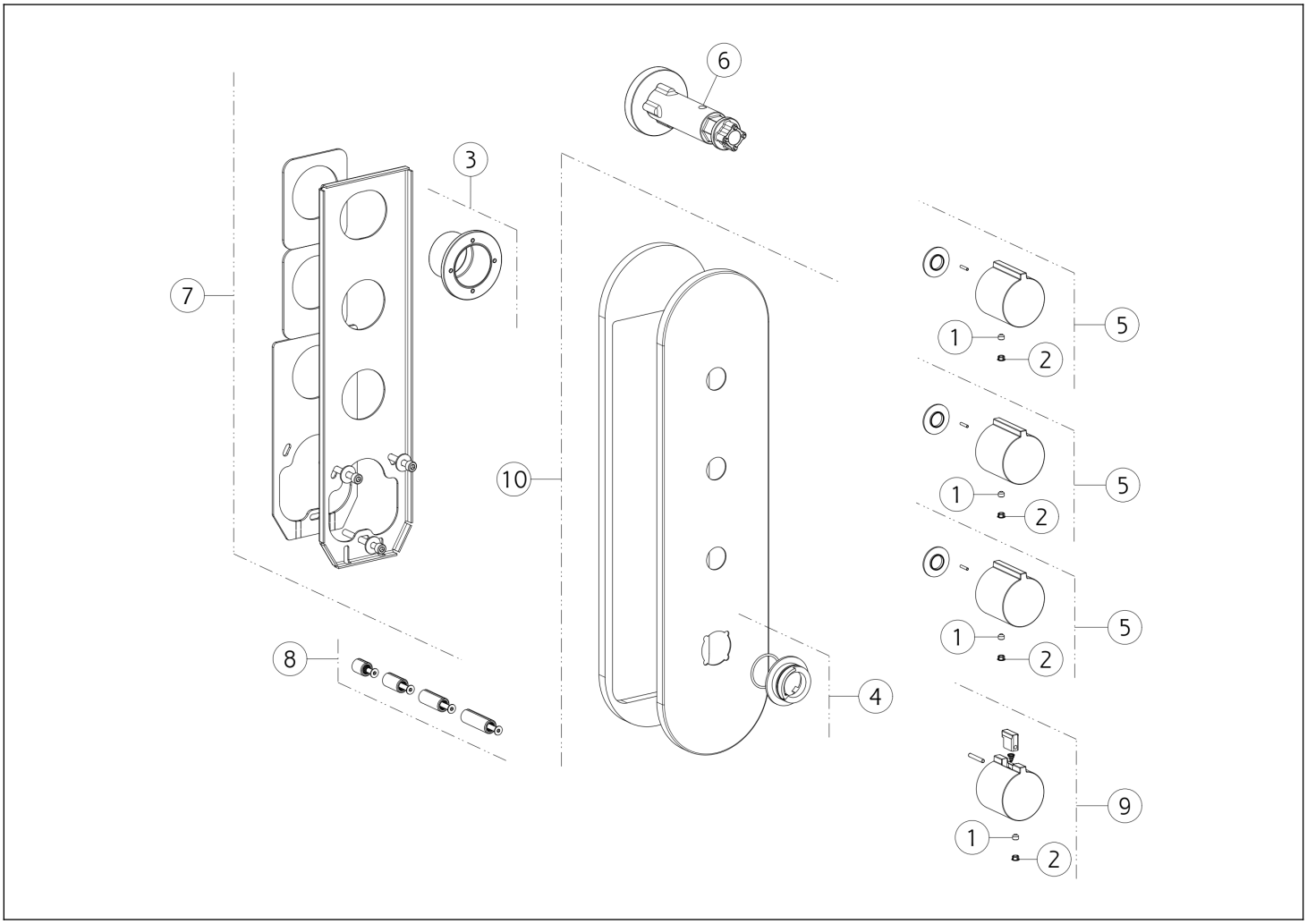

N°	Code	Description
1	SP00137	SCREW
2	SP00002	SCREW COVER
3	SP01930	BUSH
4	SP01739	INDICATOR RING
5	SP03905	HANDLE

N°	Code	Description
6	SP01932	SPECIAL TOOL
7	SP02042	SUB PLATE
8	SP01931	EXTENSION
9	SP02083	HANDLE WITH LOGO
10	SP02513	FINISHING PLATE

 This drawing, as required by law, may not be made public or reproduced without the written authorization of GESSI S.p.A. Copyright GESSI S.p.A.