GESSI

43068

GPF4306820000G000

TONDO

validity date
≥ 10/2015



External parts for wall-mounted thermostatic high-capacity mixer. Vertical/horizontal setting up with FOUR SEPARATE EXITS

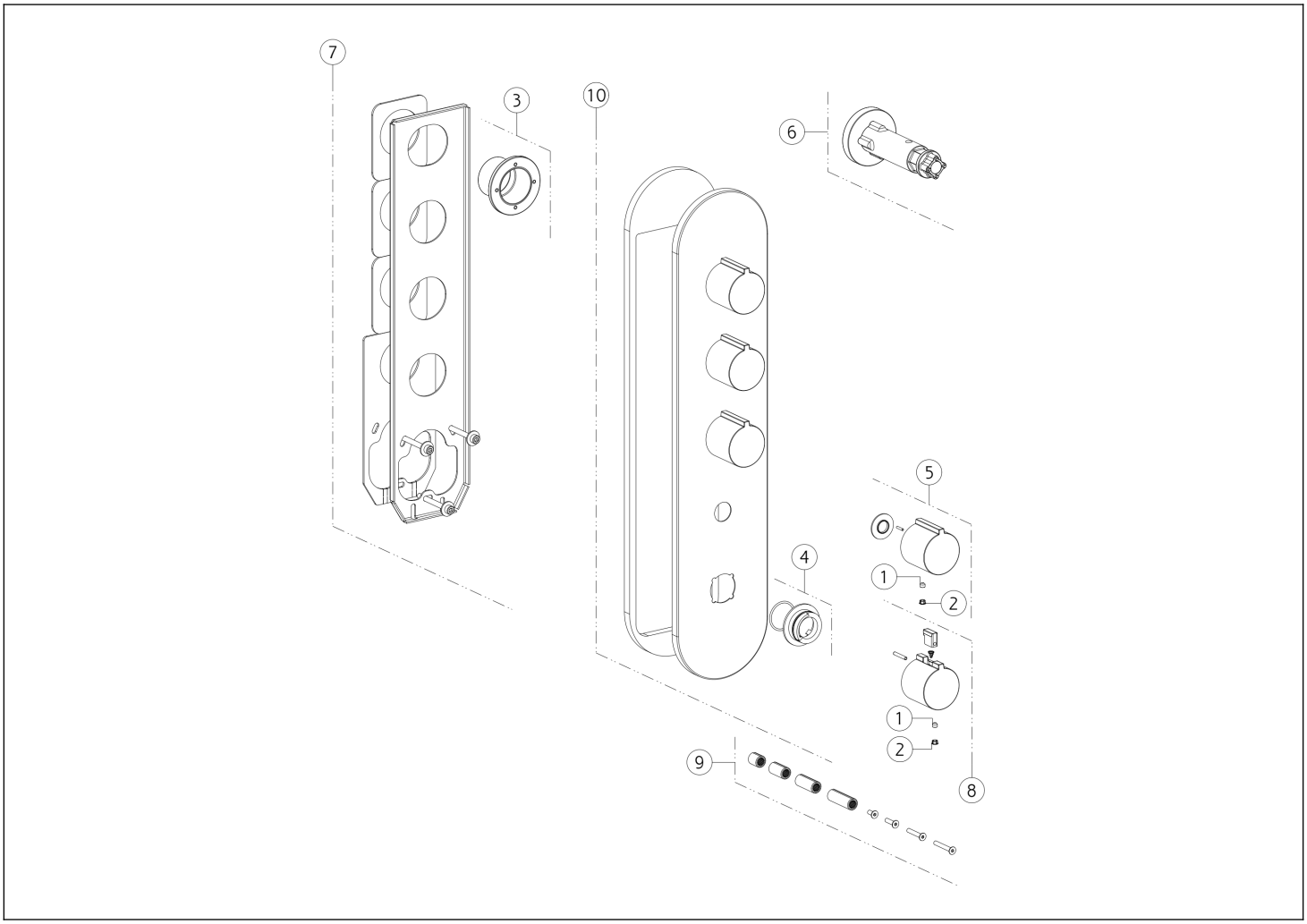

N°	Code	Description
1	SP00137	SCREW
2	SP00002	SCREW COVER
3	SP01930	BUSH
4	SP01739	INDICATOR RING
5	SP03905	HANDLE

N°	Code	Description
6	SP01932	SPECIAL TOOL
7	SP01929	SUB PLATE
8	SP02083	HANDLE WITH LOGO
9	SP01931	EXTENSION
10	SP04212	FINISHING PLATE

Gessi S.p.A. Parco Gessi, 13037 Serravalle Sesia (Vercelli) Italy Tel. +39 0163 454111 Fax. +39 0163 453150 - www.gessi.com - gessi@gessi.it This drawing, as required by law, may not be made public or reproduced without the written authorization of GESSI S.p.A. Copyright GESSI S.p.A.