GESSI

43070

GPF4307020000G000

TONDO

validity date
≥ 02/2016



External parts for wall-mounted thermostatic high-capacity mixer. Vertical/horizontal setting up with FIVE SEPARATE EXITS

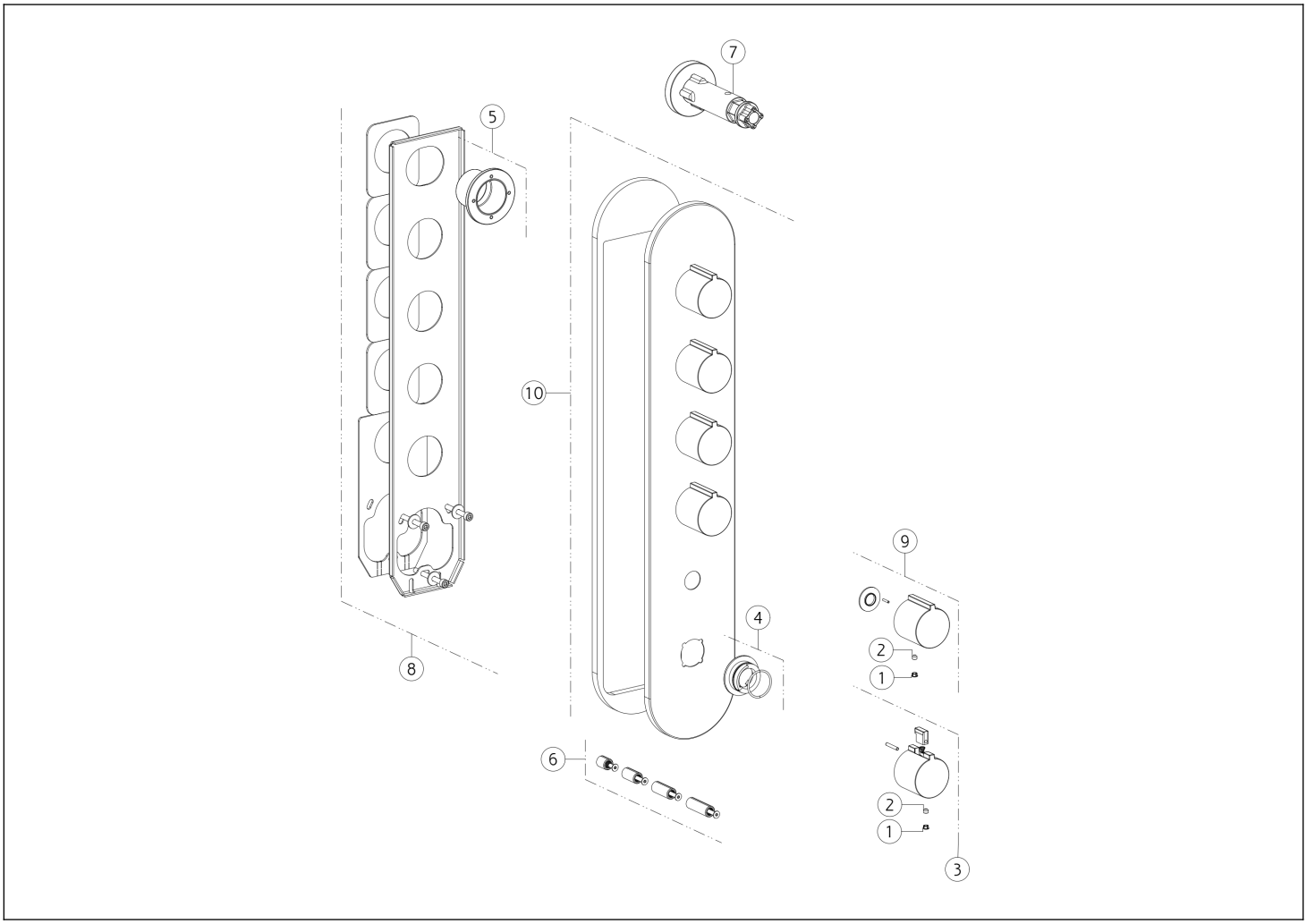

N°	Code	Description
1	SP00002	SCREW COVER
2	SP00137	SCREW
3	SP02083	HANDLE WITH LOGO
4	SP01739	INDICATOR RING
5	SP01930	BUSH

N°	Code	Description
6	SP01931	EXTENSION
7	SP01932	SPECIAL TOOL
8	SP02633	SUB PLATE
9	SP03905	HANDLE
10	SP05064	FINISHING PLATE

Gessi S.p.A. Parco Gessi, 13037 Serravalle Sesia (Vercelli) Italy Tel. +39 0163 454111 Fax. +39 0163 453150 - www.gessi.com - gessi@gessi.it This drawing, as required by law, may not be made public or reproduced without the written authorization of GESSI S.p.A. Copyright GESSI S.p.A.