GESSI

43214

GPF43214410000G000

RETTANGOLO

validity date
≥ 11/2015

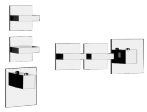

External parts for wall-mounted thermostatic high-capacity mixer. Vertical/horizontal setting up with TWO SEPARATE EXITS

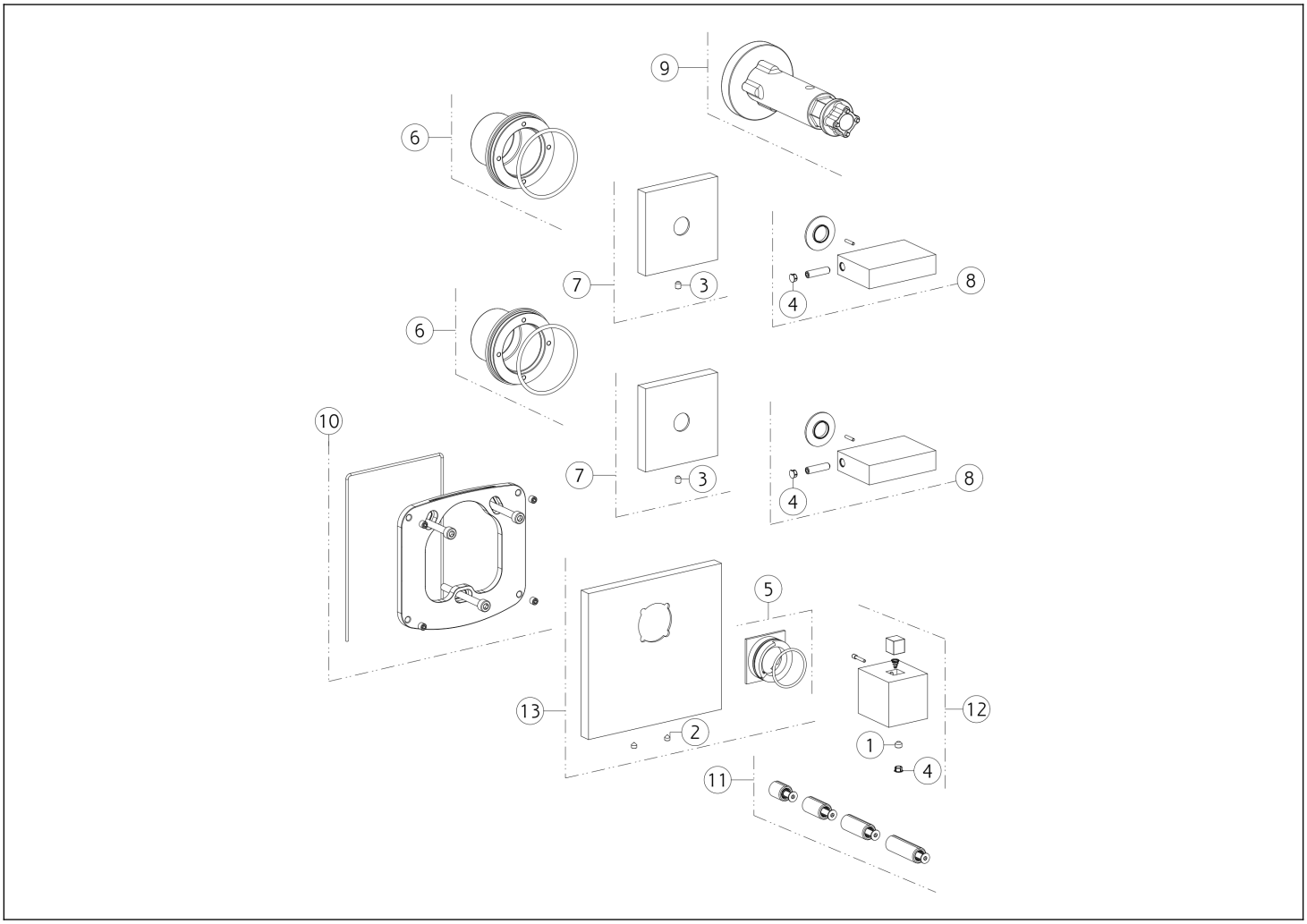

N°	Code	Description
1	SP00137	SCREW
2	SP00165	SCREW
3	SP02093	SCREW
4	SP00002	SCREW COVER
5	SP01927	INDICATOR RING
6	SP03893	BUSH
7	SP03894	PLATE

N°	Code	Description
8	SP01925	HANDLE
9	SP01932	SPECIAL TOOL
10	SP03897	SUB PLATE
11	SP01931	EXTENSION
12	SP01924	HANDLE
13	SP03895	FINISHING PLATE

 This drawing, as required by law, may not be made public or reproduced without the written authorization of GESSI S.p.A. Copyright GESSI S.p.A.