GESSI

43216

GPF4321610000G000

RETTANGOLO

validity date
≥ 09/2015

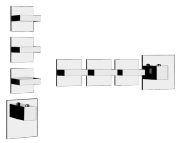

External parts for wall-mounted thermostatic high-capacity mixer. Vertical/horizontal setting up with THREE SEPARATE EXITS

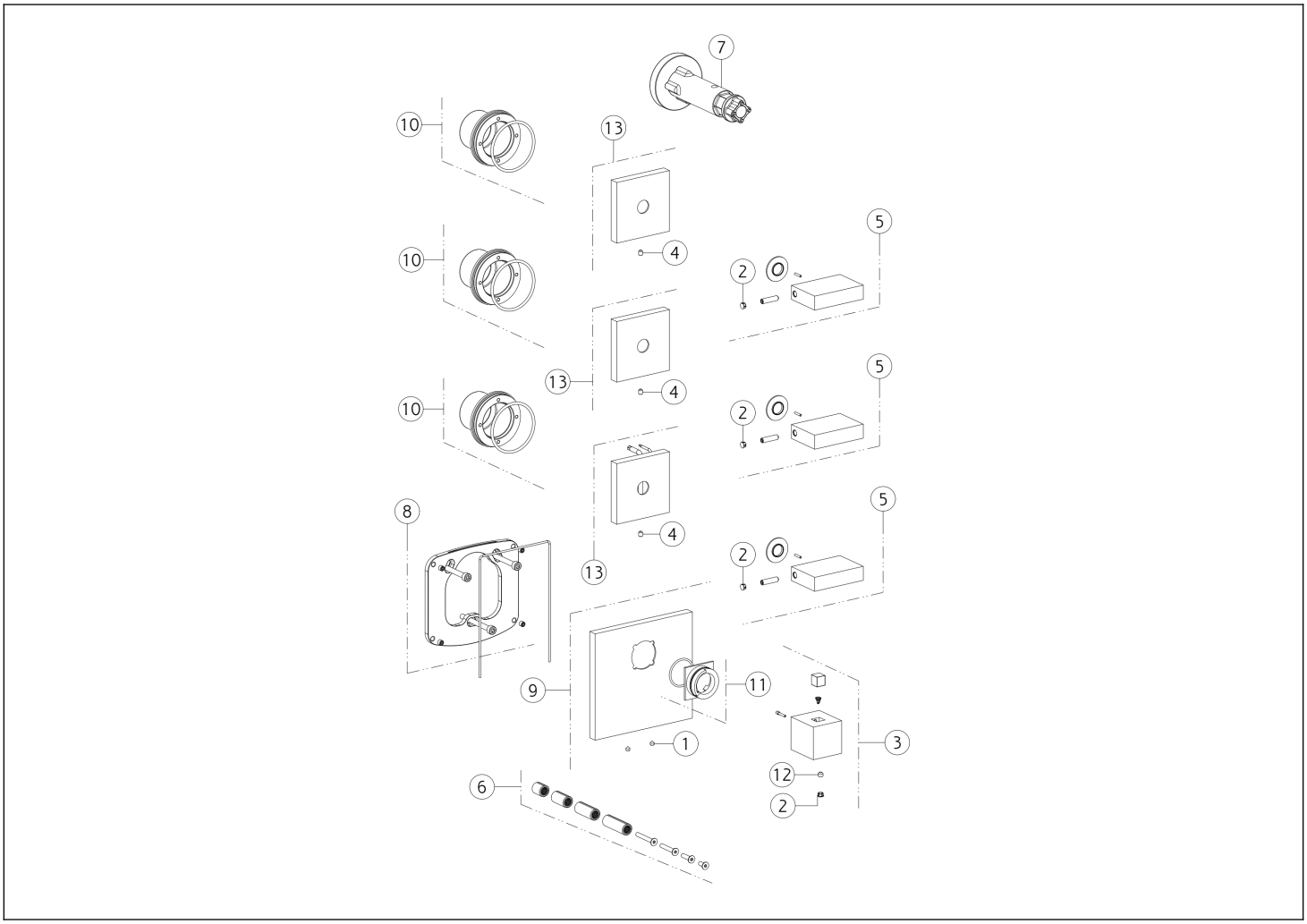

N°	Code	Description
1	SP00165	SCREW
2	SP00002	SCREW COVER
3	SP01924	HANDLE
4	SP02093	SCREW
5	SP01925	HANDLE
6	SP01931	EXTENSION
7	SP01932	SPECIAL TOOL

N°	Code	Description
8	SP03897	SUB PLATE
9	SP03895	FINISHING PLATE
10	SP03893	BUSH
11	SP01927	INDICATOR RING
12	SP00137	SCREW
13	SP03894	PLATE

 This drawing, as required by law, may not be made public or reproduced without the written authorization of GESSI S.p.A. Copyright GESSI S.p.A.