GESSI

43234

GPF43234100000G000

validity date
≥ 07/2014



TONDO

External parts for wall-mounted thermostatic high-capacity mixer. Vertical/horizontal setting up with TWO SEPARATE EXITS

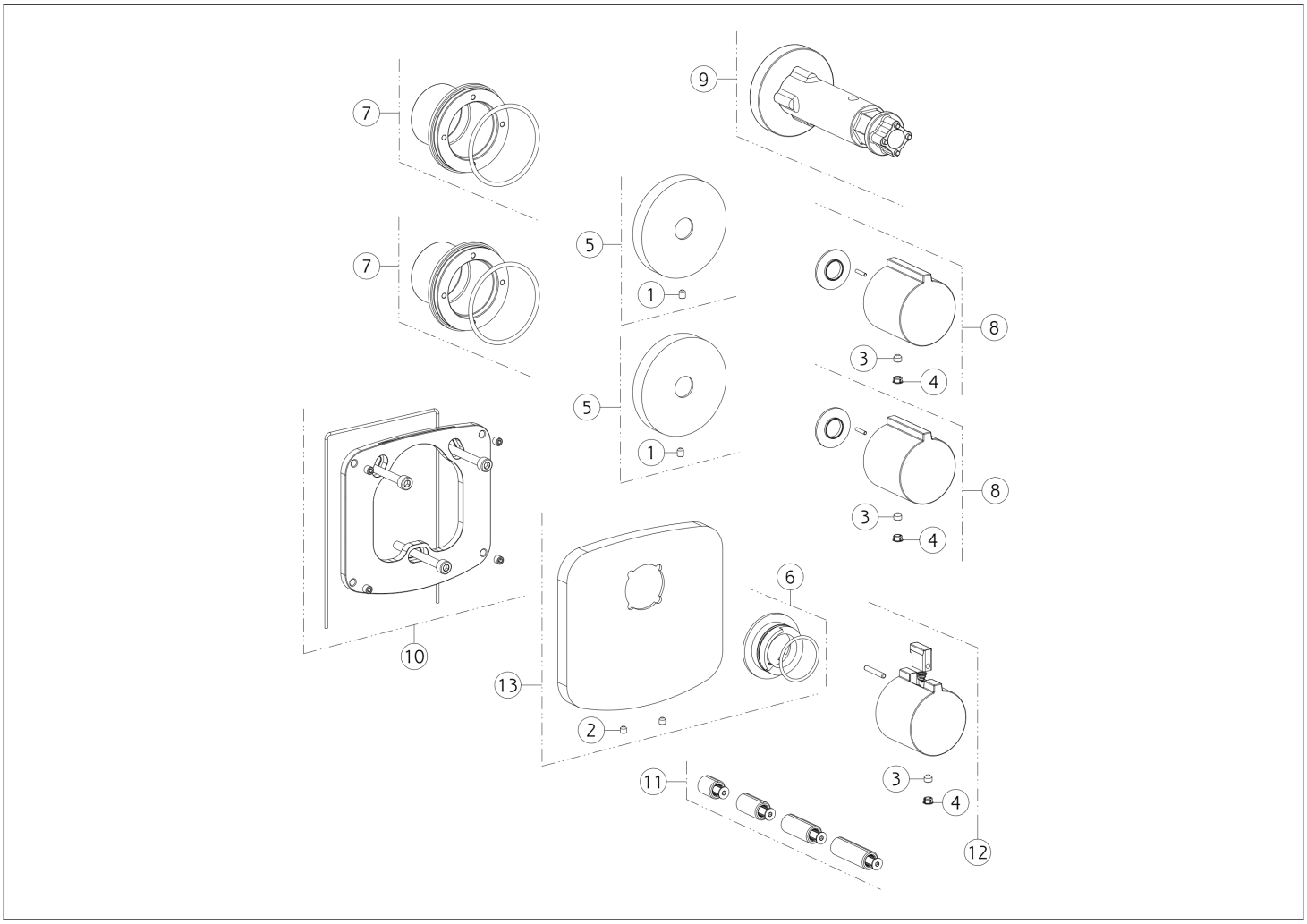

N°	Code	Description
1	SP02093	SCREW
2	SP00165	SCREW
3	SP00137	SCREW
4	SP00002	SCREW COVER
5	SP02460	COVER
6	SP01739	INDICATOR RING
7	SP02459	SUB PLATE

N°	Code	Description
8	SP03905	HANDLE
9	SP01932	SPECIAL TOOL
10	SP03897	SUB PLATE
11	SP01931	EXTENSION
12	SP02083	HANDLE WITH LOGO
13	SP03494	FINISHING PLATE

 This drawing, as required by law, may not be made public or reproduced without the written authorization of GESSI S.p.A. Copyright GESSI S.p.A.