GESSI

43238

GPF43238810000G000

validity date
≥ 05/2014

TONDO

External parts for wall-mounted thermostatic high-capacity mixer. Vertical/horizontal setting up with FOUR SEPARATE EXITS

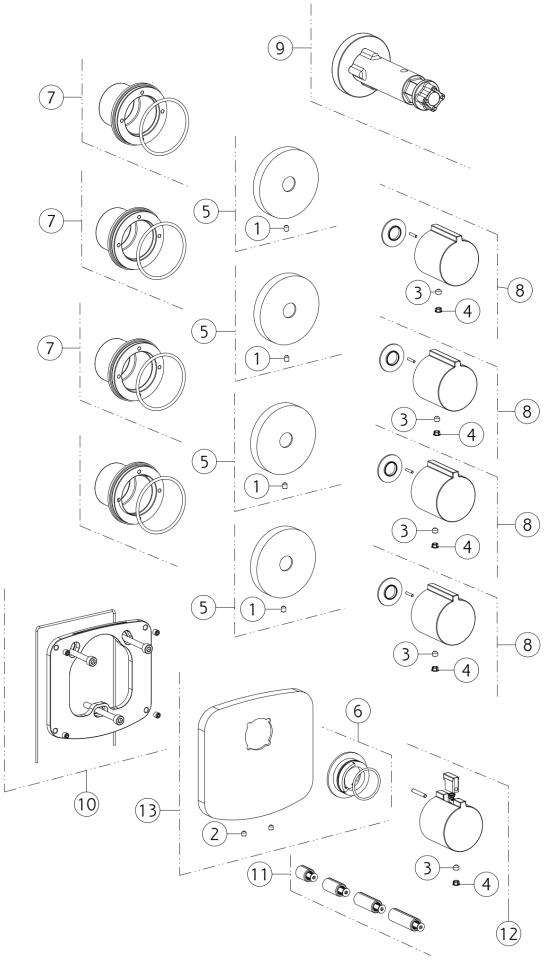

N°	Code	Description
1	SP02093	GRUB SCREW
2	SP00165	GRUB SCREW
3	SP00137	GRUB SCREW
4	SP00002	SCREW COVER
5	SP02460	ROSETTE
6	SP01739	INDICATOR RING
7	SP02459	BACK PLATE

N°	Code	Description
8	SP03905	HANDLE
9	SP01932	KEY
10	SP03897	BACK PLATE
11	SP01931	EXTENSION
12	SP02083	HANDLE WITH LOGO
13	SP03494	FINISHING PLATE

Gessi S.p.A. Parco Gessi, 13037 Serravalle Sesia (Vercelli) Italy Tel. +39 0163 454111 Fax. +39 0163 453150 - www.gessi.com - gessi@gessi.it This drawing, as required by law, may not be made public or reproduced without the written authorization of GESSI S.p.A. Copyright GESSI S.p.A.