GESSI

43256

GPF4325610000G000

TONDO

validity date
≥ 08/2014



External parts wall-mounted thermostatic high-capacity mixer

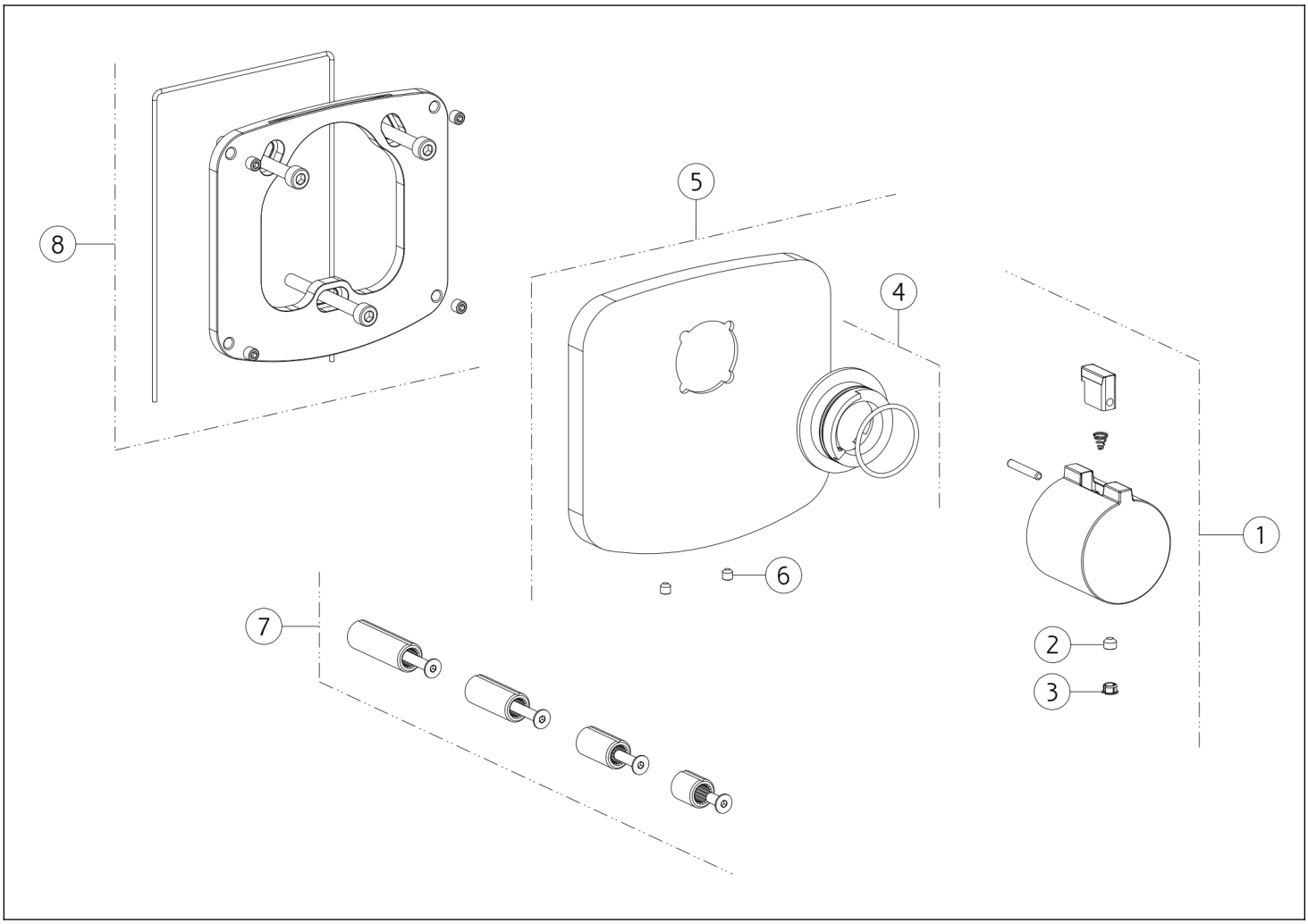

N°	Code	Description
1	SP02083	HANDLE WITH LOGO
2	SP00137	SCREW
3	SP00002	SCREW COVER
4	SP01739	INDICATOR RING

N°	Code	Description
5	SP03494	FINISHING PLATE
6	SP00165	SCREW
7	SP01931	EXTENSION
8	SP03897	SUB PLATE

Gessi S.p.A. Parco Gessi, 13037 Serravalle Sesia (Vercelli) Italy Tel. +39 0163 454111 Fax. +39 0163 453150 - www.gessi.com - gessi@gessi.it This drawing, as required by law, may not be made public or reproduced without the written authorization of GESSI S.p.A. Copyright GESSI S.p.A.