GESSI

43264

GPF4326400000G000

TONDO

validity date
≥ 08/2012



External parts for stop valve for thermostatic high-capacity mixer.

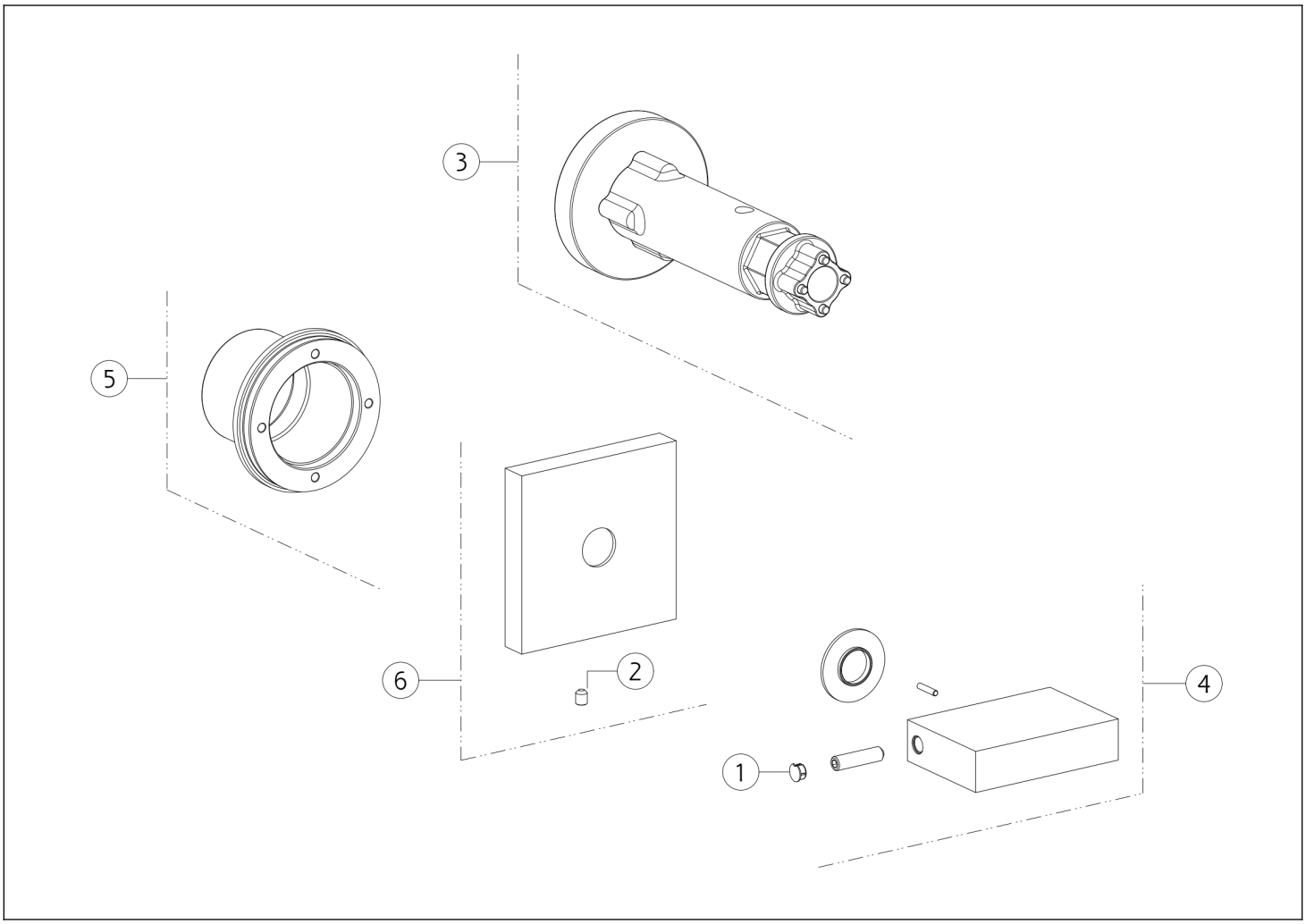

N°	Code	Description
1	SP00002	SCREW COVER
2	SP02093	SCREW
3	SP01932	SPECIAL TOOL

N°	Code	Description
4	SP01925	HANDLE
5	SP02459	SUB PLATE
6	SP03894	PLATE

Gessi S.p.A. Parco Gessi, 13037 Serravalle Sesia (Vercelli) Italy Tel. +39 0163 454111 Fax. +39 0163 453150 - www.gessi.com - gessi@gessi.it This drawing, as required by law, may not be made public or reproduced without the written authorization of GESSI S.p.A. Copyright GESSI S.p.A.