GESSI

44338

GPF4433800000G000

RETTANGOLO

validity date
≥ 07/2023



External parts for wall-mounted thermostatic mixer. Vertical/horizontal setting up with four separate exits.

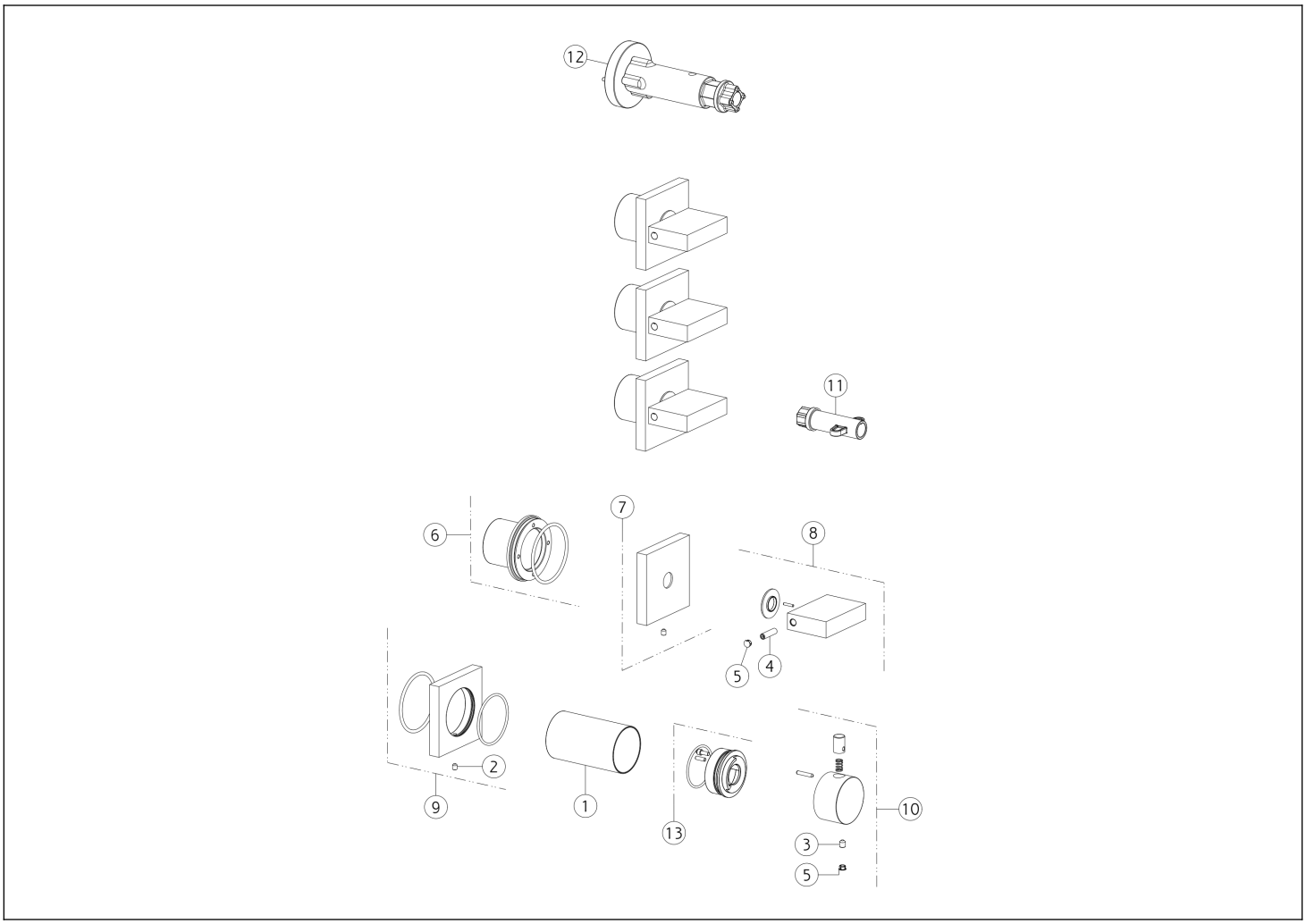

N°	Code	Description
1	SP04168	FINISHING BUSHING
2	SP02093	SCREW
3	SP00284	SCREW
4	SP01182	SCREW
5	SP00002	SCREW COVER
6	SP02459	SUB PLATE
7	SP03894	PLATE

N°	Code	Description
8	SP01925	HANDLE
9	SP04540	COVER
10	SP04541	HANDLE
11	SP01935	SPECIAL TOOL
12	SP01932	SPECIAL TOOL
13	SP01781	INDICATOR RING

Gessi S.p.A. Parco Gessi, 13037 Serravalle Sesia (Vercelli) Italy Tel. +39 0163 454111 Fax. +39 0163 453150 - www.gessi.com - gessi@gessi.it This drawing, as required by law, may not be made public or reproduced without the written authorization of GESSI S.p.A. Copyright GESSI S.p.A.