GESSI

44602

GPF44602000000G000

RETTANGOLO

validity date
≥ 05/2014

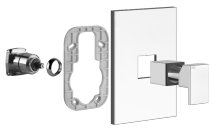

External parts wall-mounted shower mixer, one-way

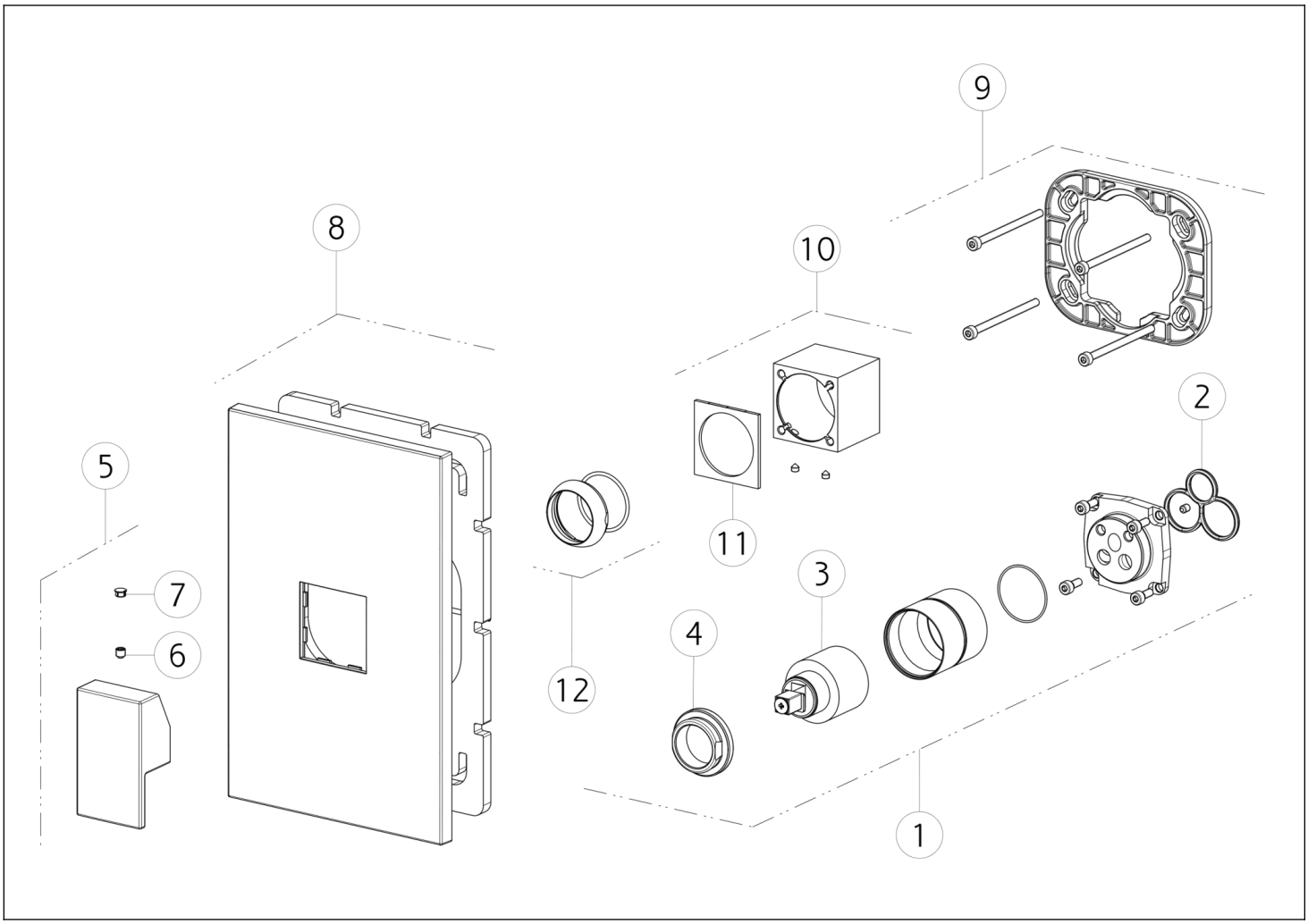

N°	Code	Description
1	SP01040	CARTRIDGE GROUP
2	SP00506	GASKET
3	SP00013	CARTRIDGE
4	SP00023	FIXING RING NUT
5	SP01038	HANDLE
6	SP00610	SCREW

N°	Code	Description
7	SP00002	SCREW COVER
8	SP01043	FINISHING PLATE
9	SP00576	SUB PLATE
10	SP01041	FINISHING BUSHING
11	SP01037	INDICATOR RING
12	SP00565	FINISHING RING NUT

Gessi S.p.A. Parco Gessi, 13037 Serravalle Sesia (Vercelli) Italy Tel. +39 0163 454111 Fax. +39 0163 453150 - www.gessi.com - gessi@gessi.it This drawing, as required by law, may not be made public or reproduced without the written authorization of GESSI S.p.A. Copyright GESSI S.p.A.